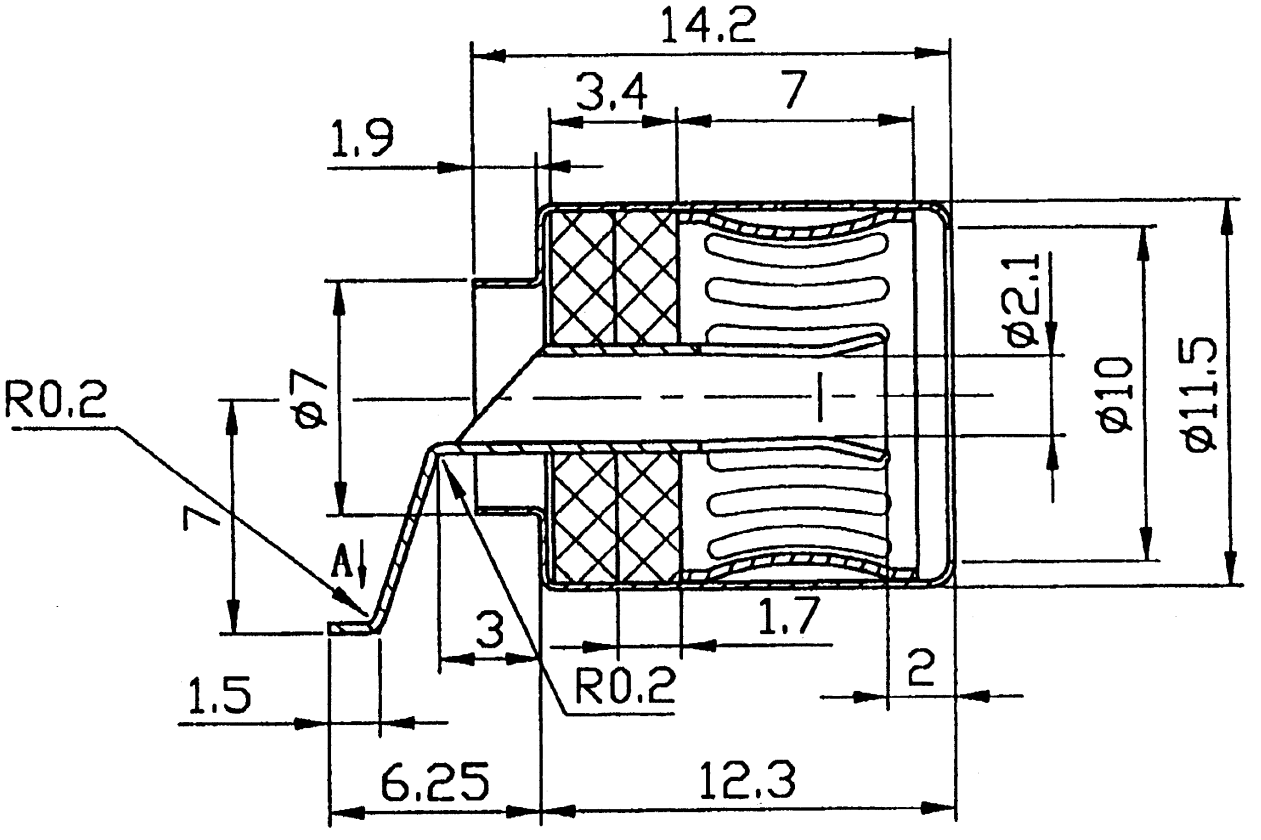
14.2
3.4
7
1.9
ø2.1
ø10
ø11.5
ø7
R0.2
7
A
3
1.7
R0.2
2
1.5
6.25
12.3