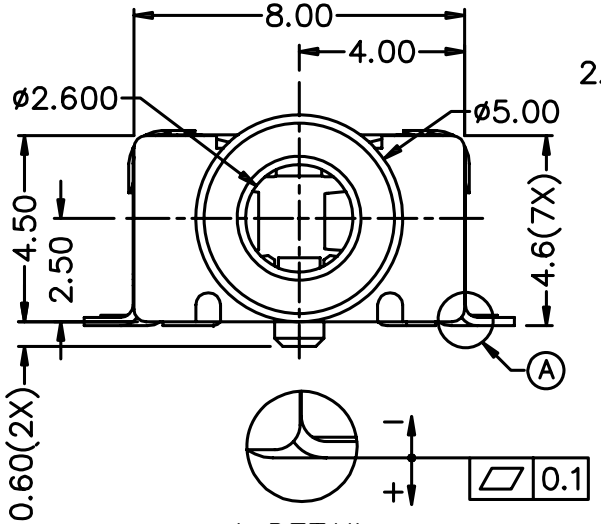

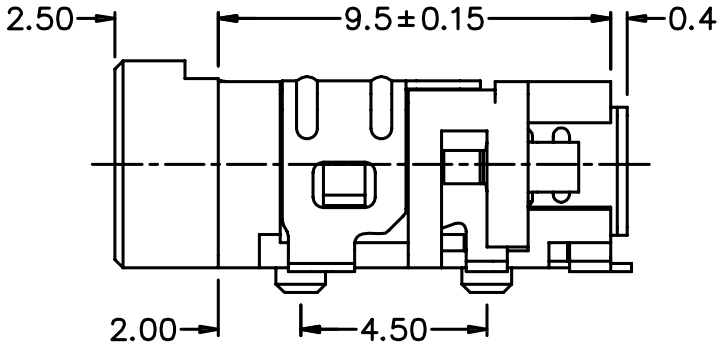

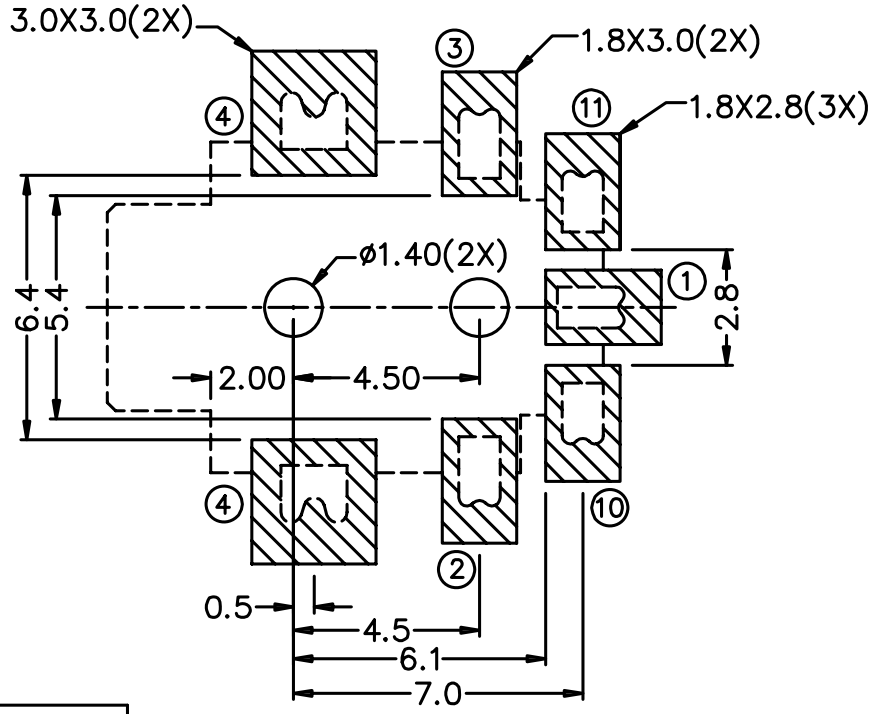

ST−270D−01	ST−270D−02	ST−270D−03	ST−270D−04	ST−270D−05
1, 4, 3, 11, 10, 2	1, 4, 3, 10, 2	1, 4, 3, 11, 2	4, 3, 11, 10, 2	1, 4, 3, 2