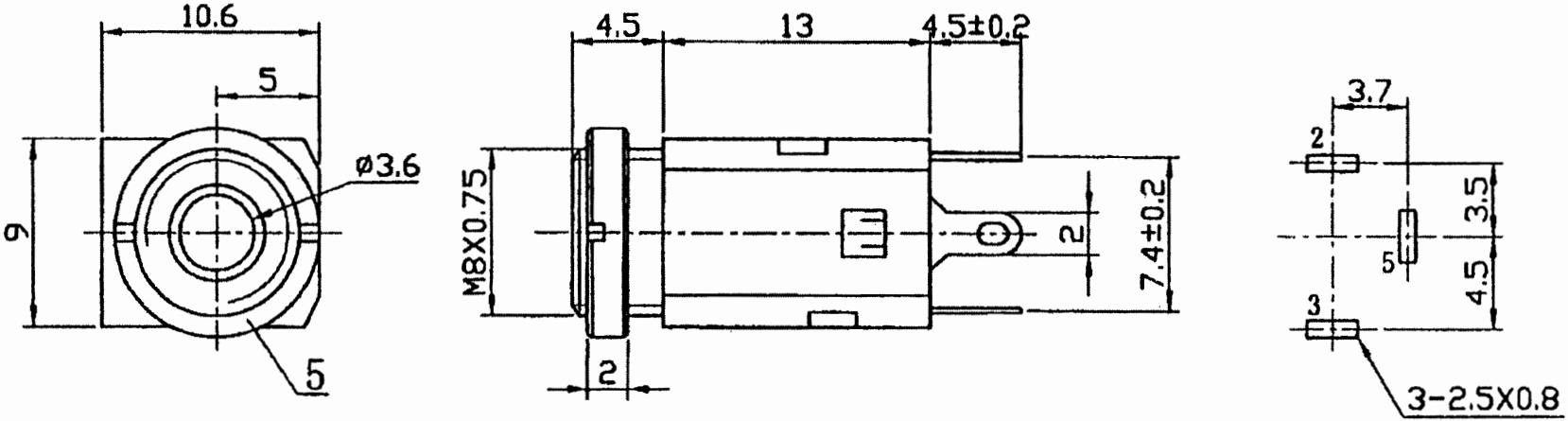
10.6
5
ø3.6
9
5
4.5
13
4.5±0.2
M8X0.75
2
7.4±0.2
2
3.7
2
3.5
5
4.5
3
3-2.5X0.8