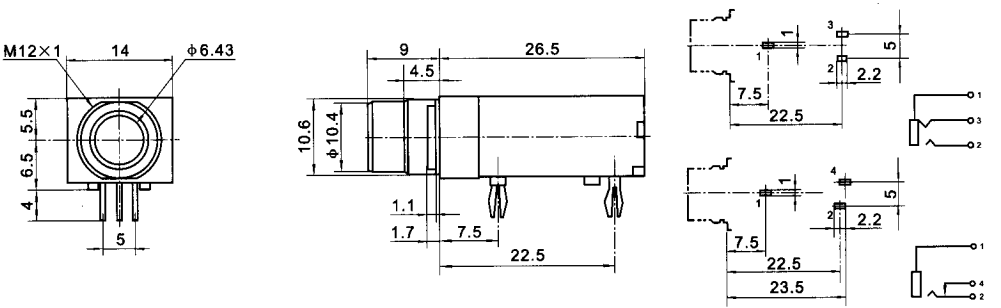
M12×1
14
ϕ6.43
5.5
6.5
4
5
9
26.5
4.5
10.6
ϕ10.4
1.1
1.7
7.5
22.5
1
3
2
5
2.2
7.5
22.5
1
3
2
1
4
2
5
2.2
7.5
22.5
23.5
1
4
2