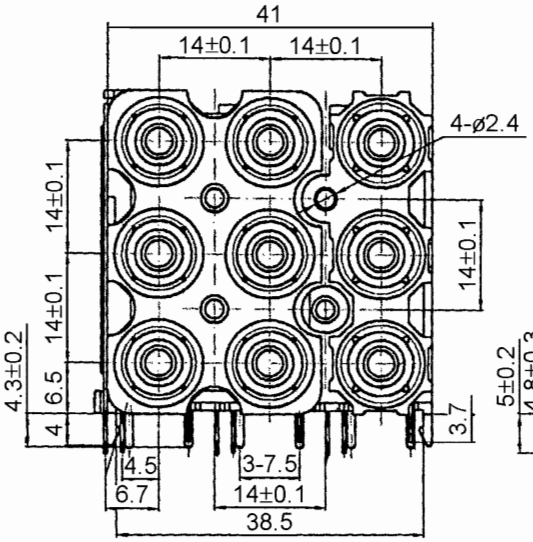
41
14±0.1
14±0.1
4-ø2.4
14±0.1
14±0.1
14±0.1
4.3±0.2
6.5
4
3.7
4.5
6.7
3-7.5
14±0.1
38.5

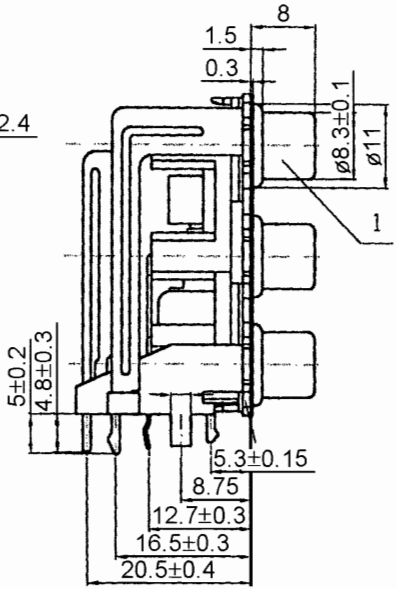
8
1.5
0.3
ø8.3±0.1
ø11
1
5±0.2
4.8±0.3
5.3±0.15
8.75
12.7±0.3
16.5±0.3
20.5±0.4

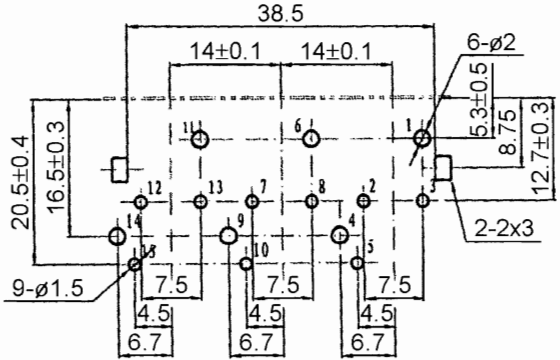
38.5
14±0.1
14±0.1
6-ø2
5.3±0.5
8.75
12.7±0.3
20.5±0.4
16.5±0.3
2-2x3
9-ø1.5
7.5
7.5
7.5
4.5
4.5
4.5
6.7
6.7
6.7

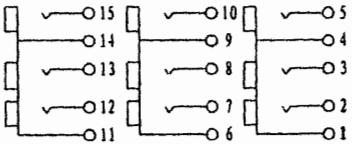
15
14
13
12
11
10
9
8
7
6
5
4
3
2
1