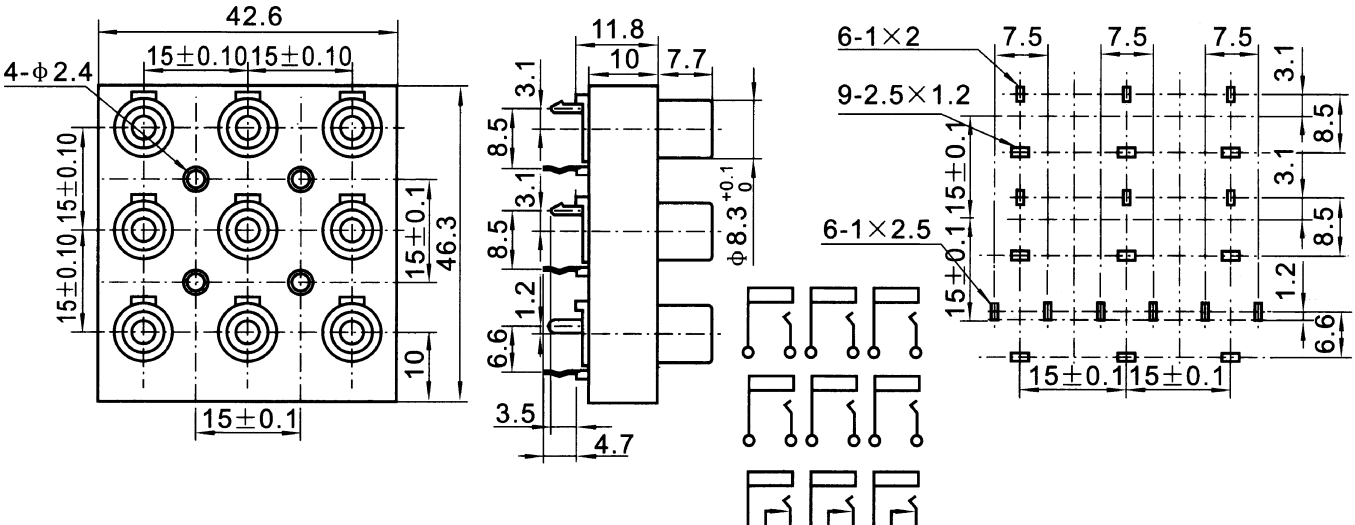
42.6
15±0.10
15±0.10
4-φ2.4
15±0.10
15±0.10
15±0.1
46.3
10
15±0.1
11.8
10
7.7
3.1
8.5
3.1
8.5
1.2
6.6
3.5
4.7
φ8.3 +0.1 0
6-1×2
9-2.5×1.2
6-1×2.5
7.5
7.5
7.5
3.1
8.5
3.1
8.5
1.2
6.6
15±0.1
15±0.1
15±0.1
15±0.1