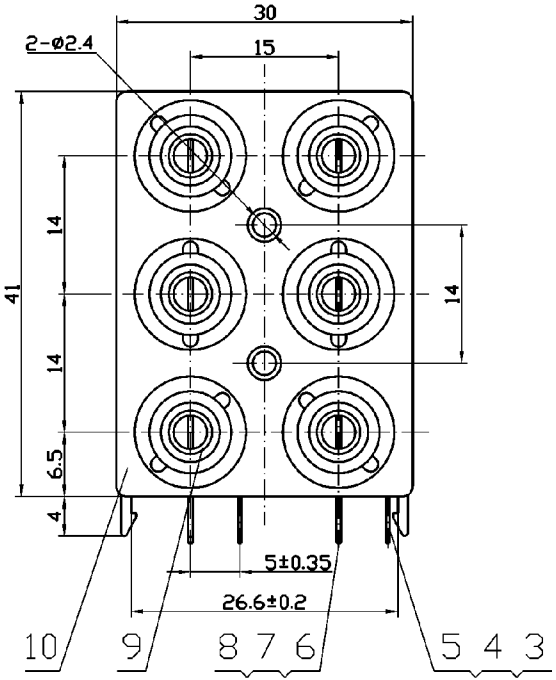

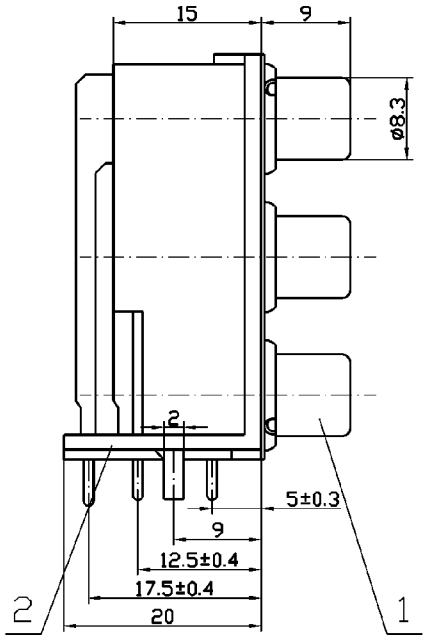

Dimensions of PC board holes (Commend)

Top View (t=1.6mm)⊗

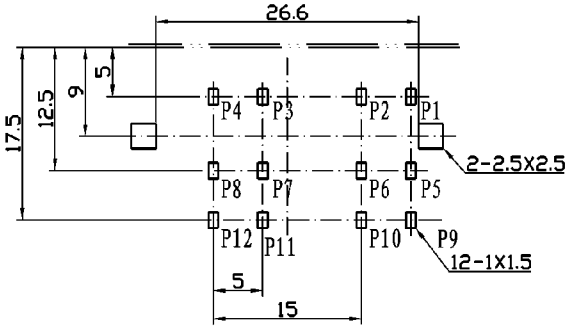

Circuit Diagram

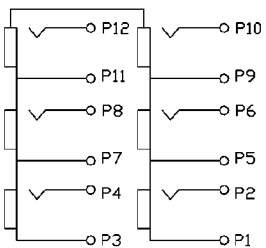

Gauge Plug

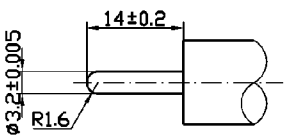

Model No. RS-659