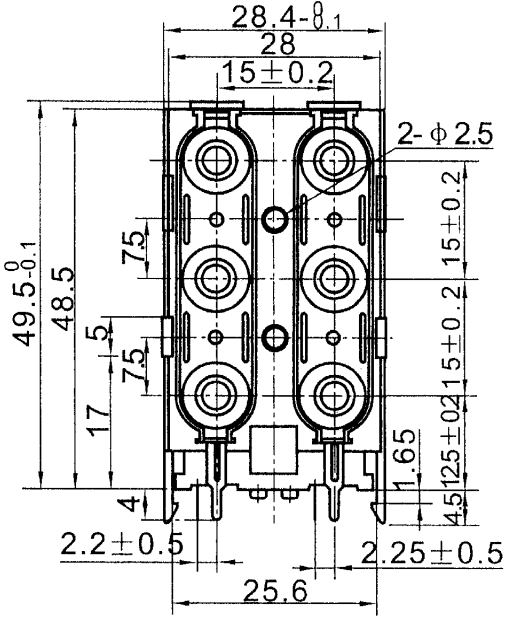
28.4-0.1
28
15±0.2
2-φ2.5
49.5-0.1
48.5
17
7.5
5
7.5
15±0.2
15±0.2
15±0.2
1.65
4.5
4
2.2±0.5
2.25±0.5
25.6

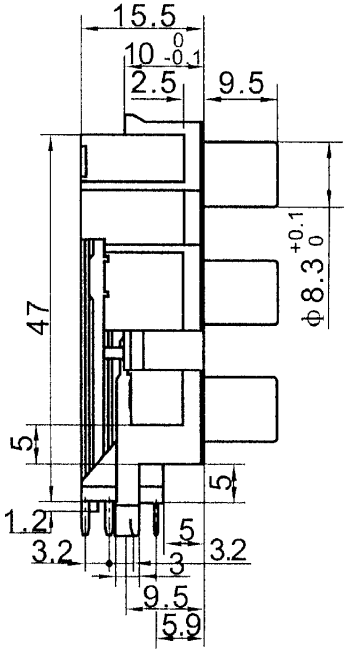
15.5
10 0 -0.1
2.5
9.5
φ8.3 +0.1 0
47
5
5
1.2
5
3.2
3
3.2
9.5
5.9

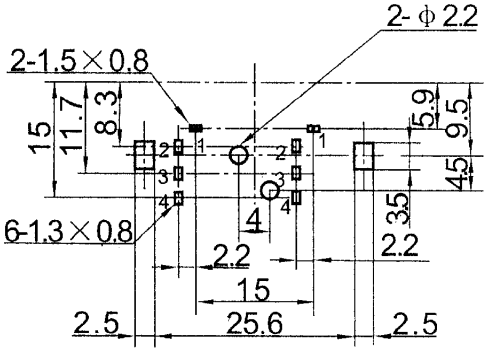
2-φ2.2
2-1.5×0.8
15
11.7
8.3
5.9
9.5
4.5
3.5
4
6-1.3×0.8
2.2
2.2
15
2.5
25.6
2.5

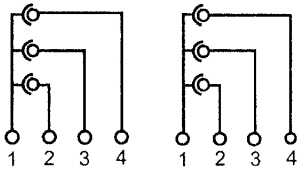
1 2 3 4
1 2 3 4