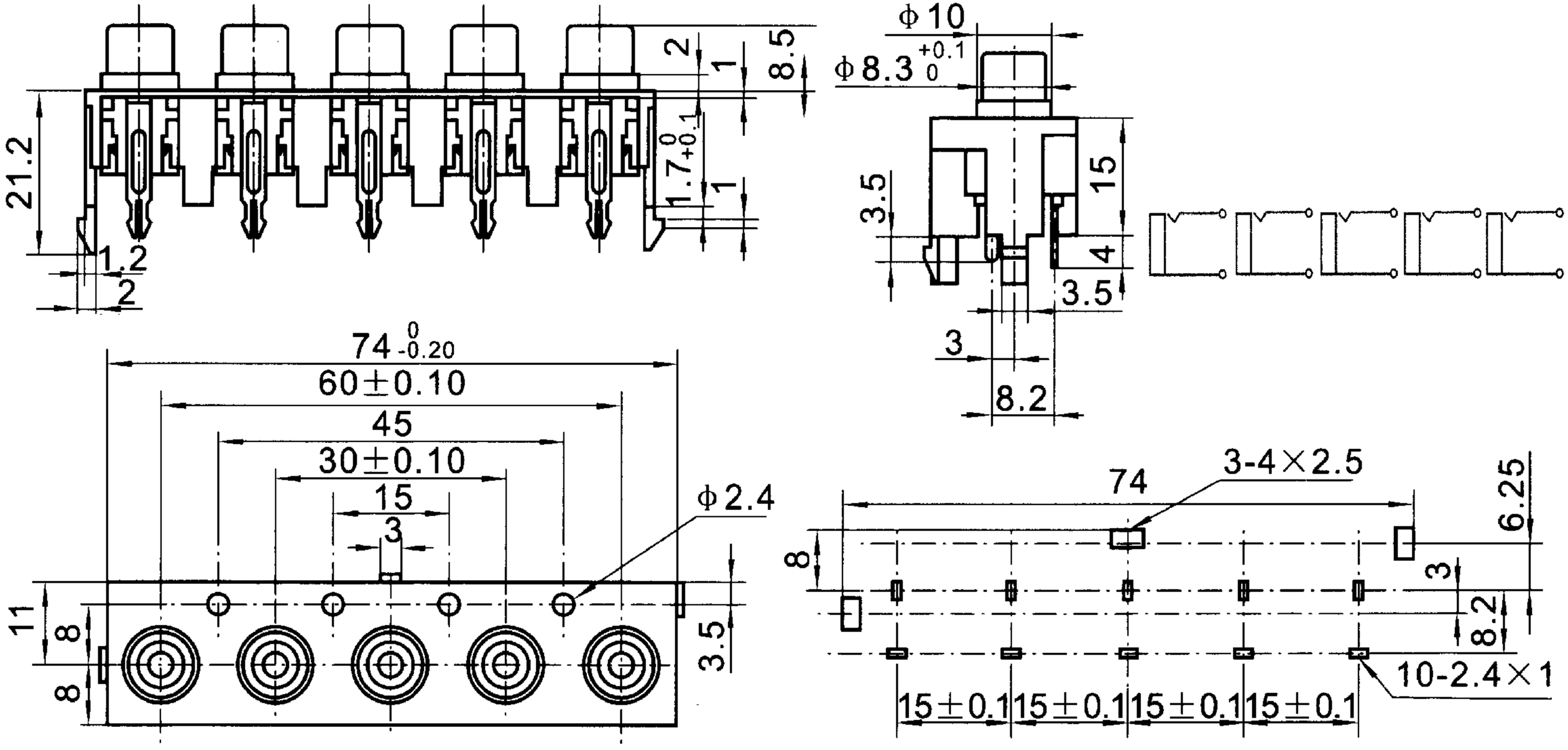
21.2
1.2
2
2
1
8.5
1.7 0 +0.1
1
Φ10
Φ8.3 +0.1 0
3.5
15
4
3.5
3
8.2
74 0 -0.20
60±0.10
45
30±0.10
15
3
Φ2.4
11
8
8
3.5
74
3-4×2.5
6.25
8
3
8.2
10-2.4×1
15±0.1
15±0.1
15±0.1
15±0.1