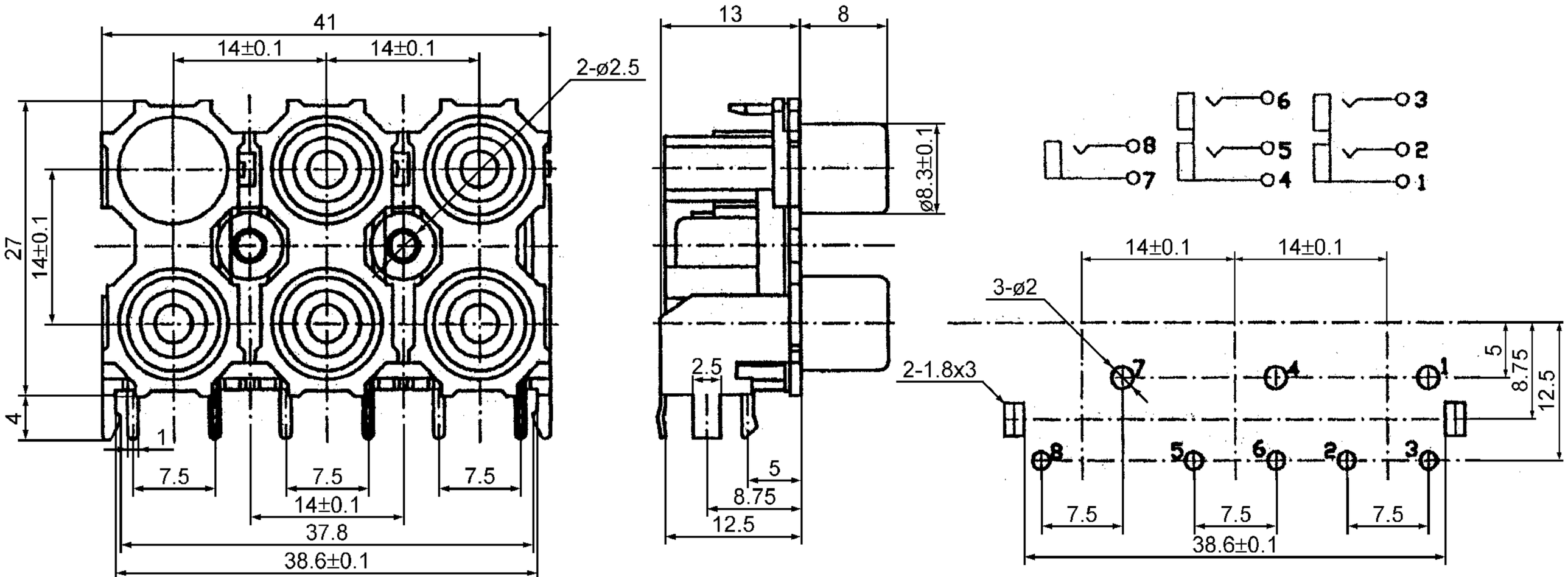
41
14±0.1
14±0.1
2-ø2.5
27
14±0.1
4
1
7.5
7.5
7.5
14±0.1
37.8
38.6±0.1
13
8
ø8.3±0.1
2.5
5
8.75
12.5
8
7
6
5
4
3
2
1
14±0.1
14±0.1
3-ø2
2-1.8x3
7
4
1
8
5
6
2
3
5
8.75
12.5
7.5
7.5
7.5
38.6±0.1