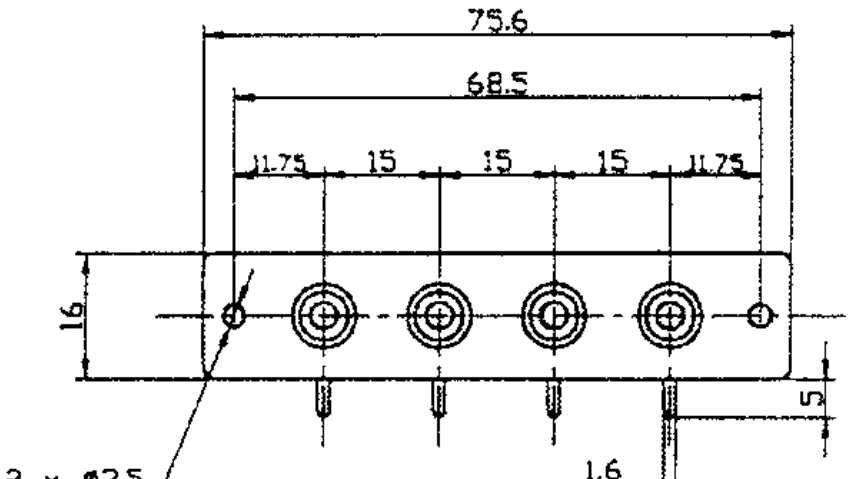
75.6
68.5
11.75
15
15
15
11.75
16
5
1.6
2 x ø3.5

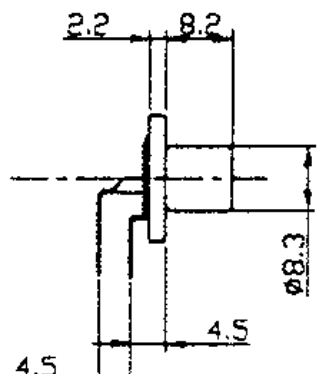
2.2
8.2
ø8.3
4.5
4.5

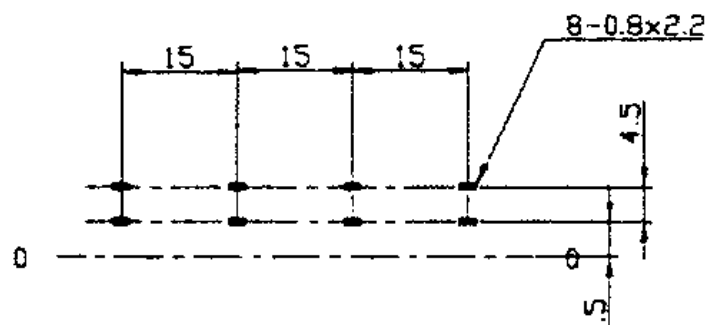
8-0.8x2.2
15
15
15
4.5
4.5
0
0