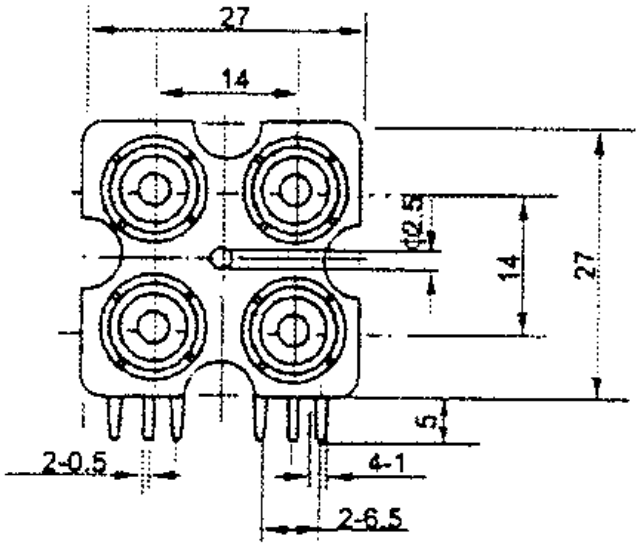
27
14
Φ2.5
14
27
5
2-0.5
4-1
2-6.5

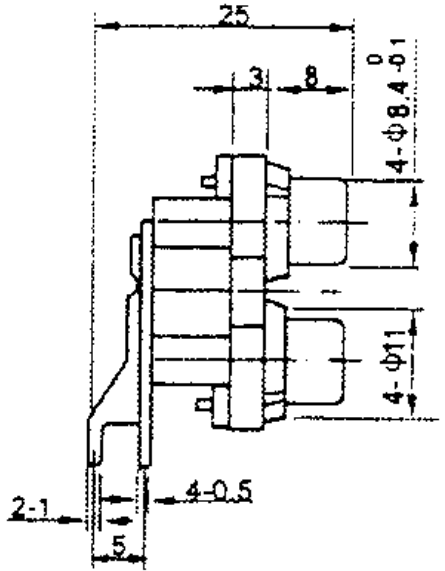
25
3
8
4-Φ8.4 0 -0.1
4-Φ11
2-1
4-0.5
5

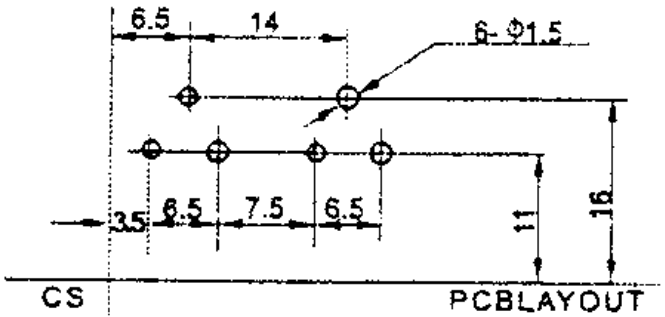
6.5
14
6-Φ1.5
3.5
6.5
7.5
6.5
11
16
CS
PCBLAYOUT