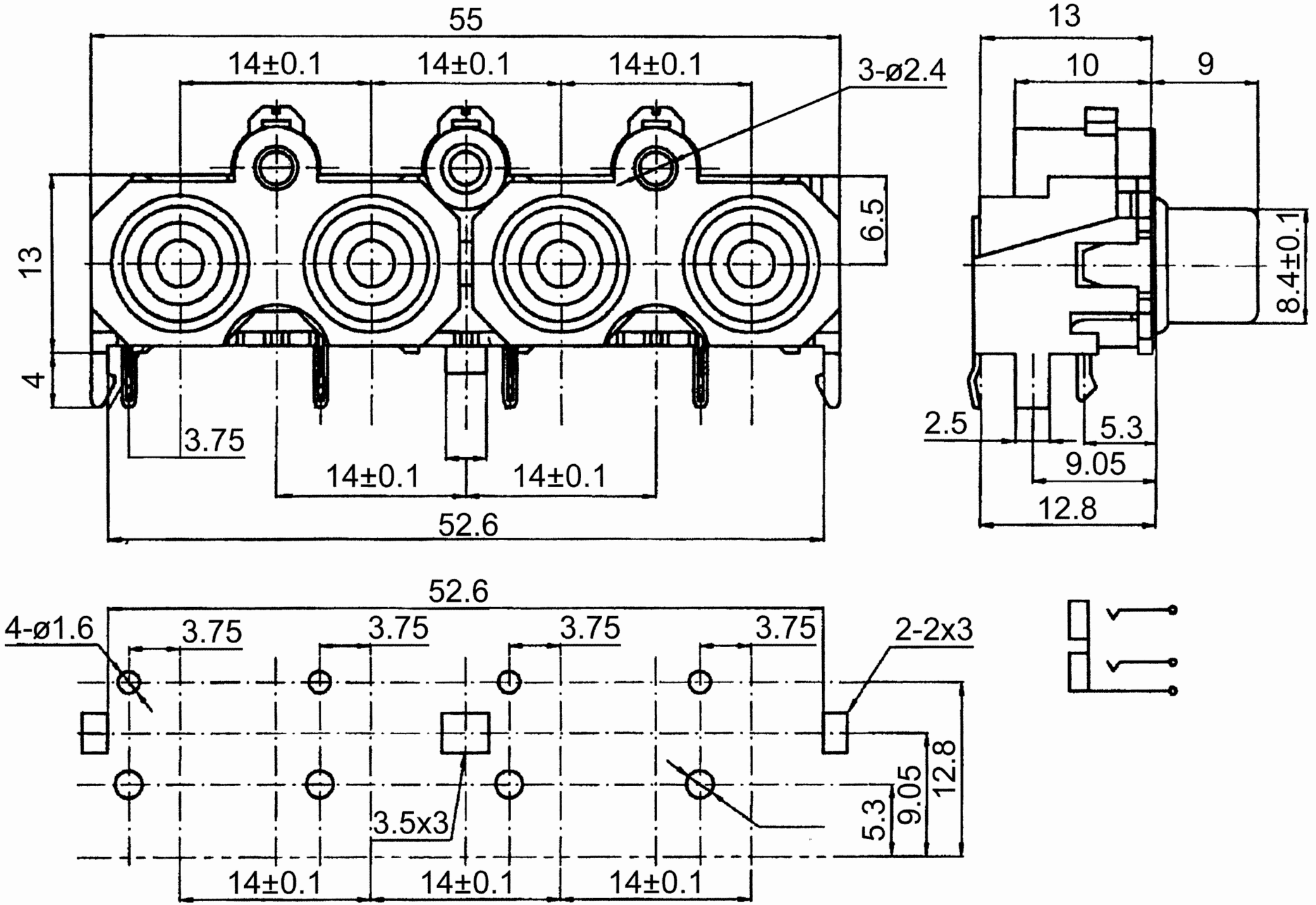
55
14±0.1
14±0.1
14±0.1
3-ø2.4
13
6.5
4
3.75
14±0.1
14±0.1
52.6
13
10
9
8.4±0.1
2.5
5.3
9.05
12.8
52.6
4-ø1.6
3.75
3.75
3.75
3.75
2-2x3
12.8
9.05
5.3
3.5x3
14±0.1
14±0.1
14±0.1