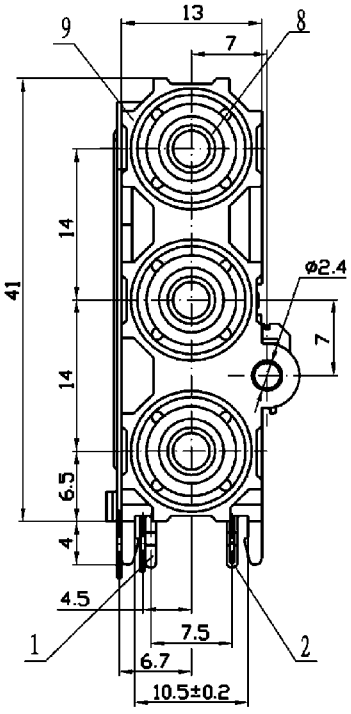

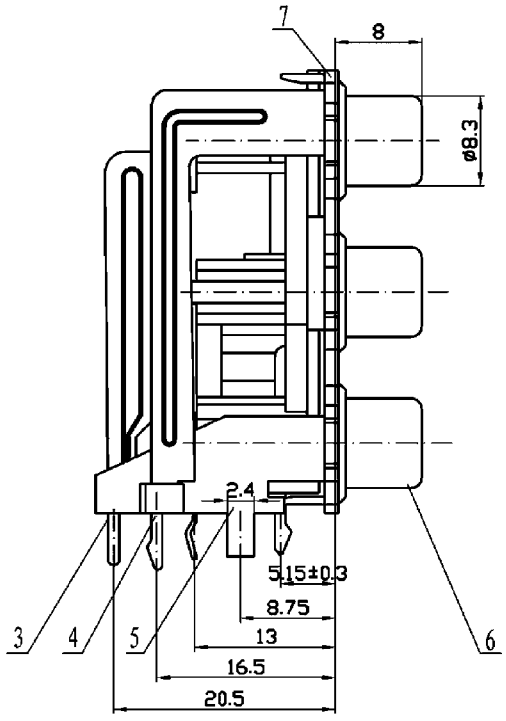

Dimensions of PC board holes (Commend)

Top View (t=1.6mm) ⊗

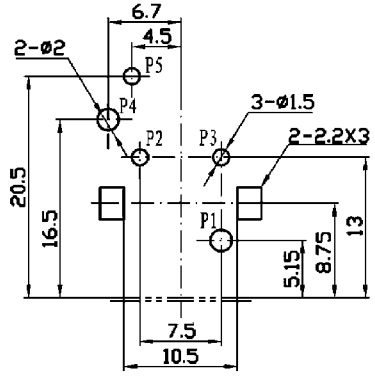

Gauge Plug

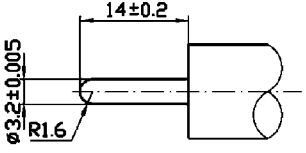

Circuit Diagram

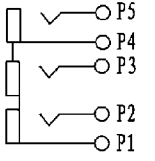

Model No. RS-353