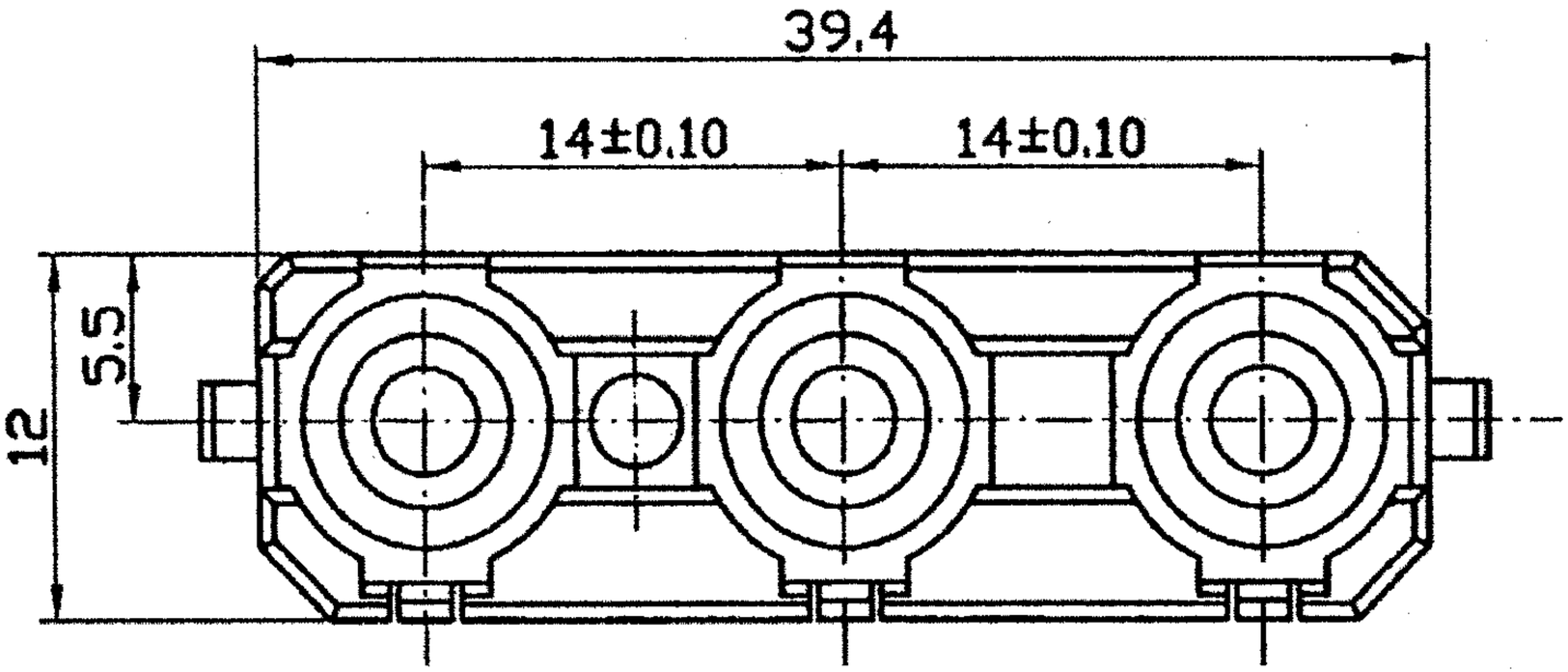
39.4
14±0.10
14±0.10
5.5
12

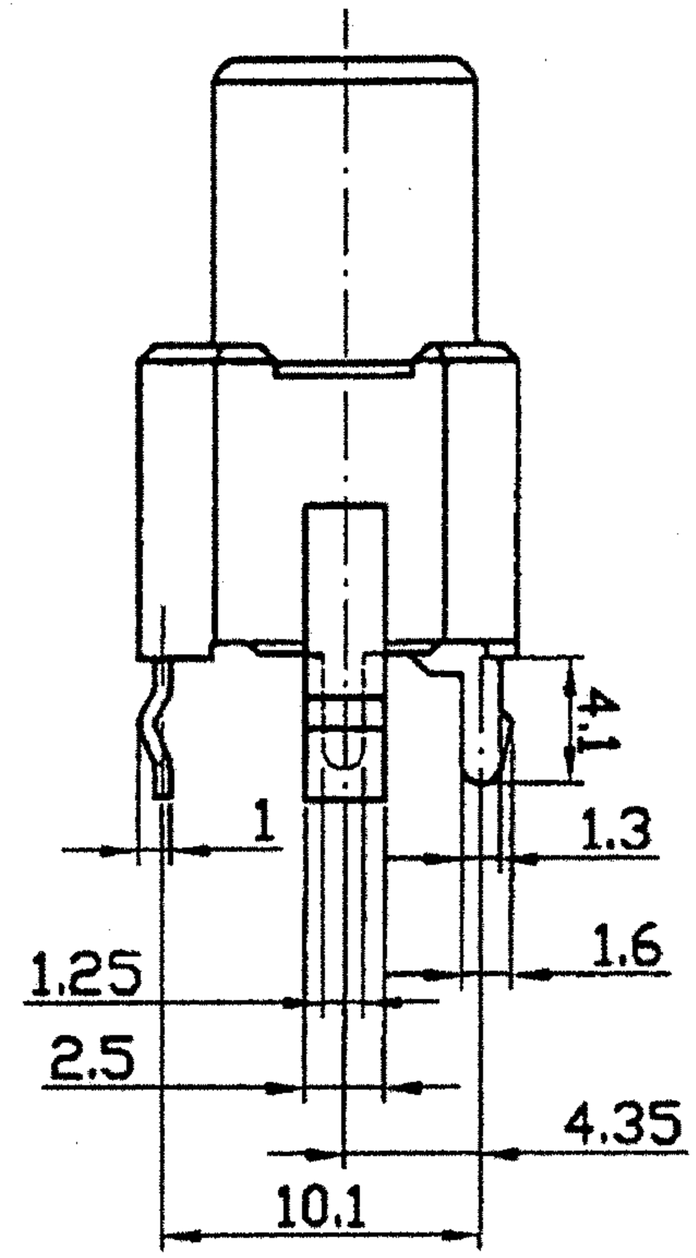
4.1
1
1.3
1.6
1.25
2.5
4.35
10.1

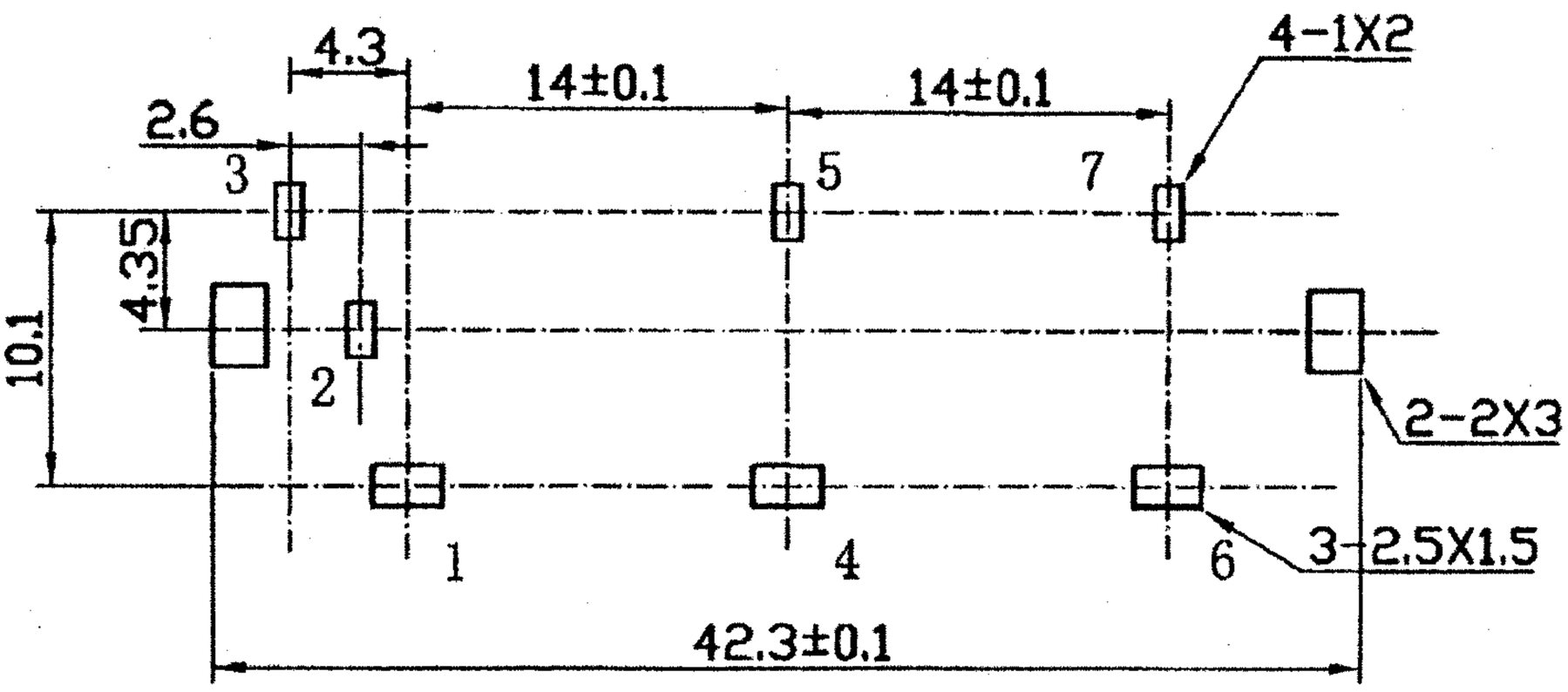
4.3
14±0.1
14±0.1
4-1X2
2.6
3
5
7
4.35
10.1
2
2-2X3
1
4
6
3-2.5X1.5
42.3±0.1

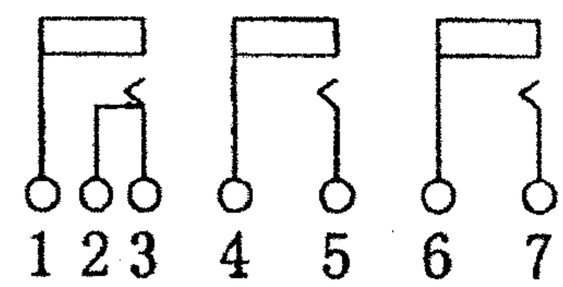
1 2 3 4 5 6 7