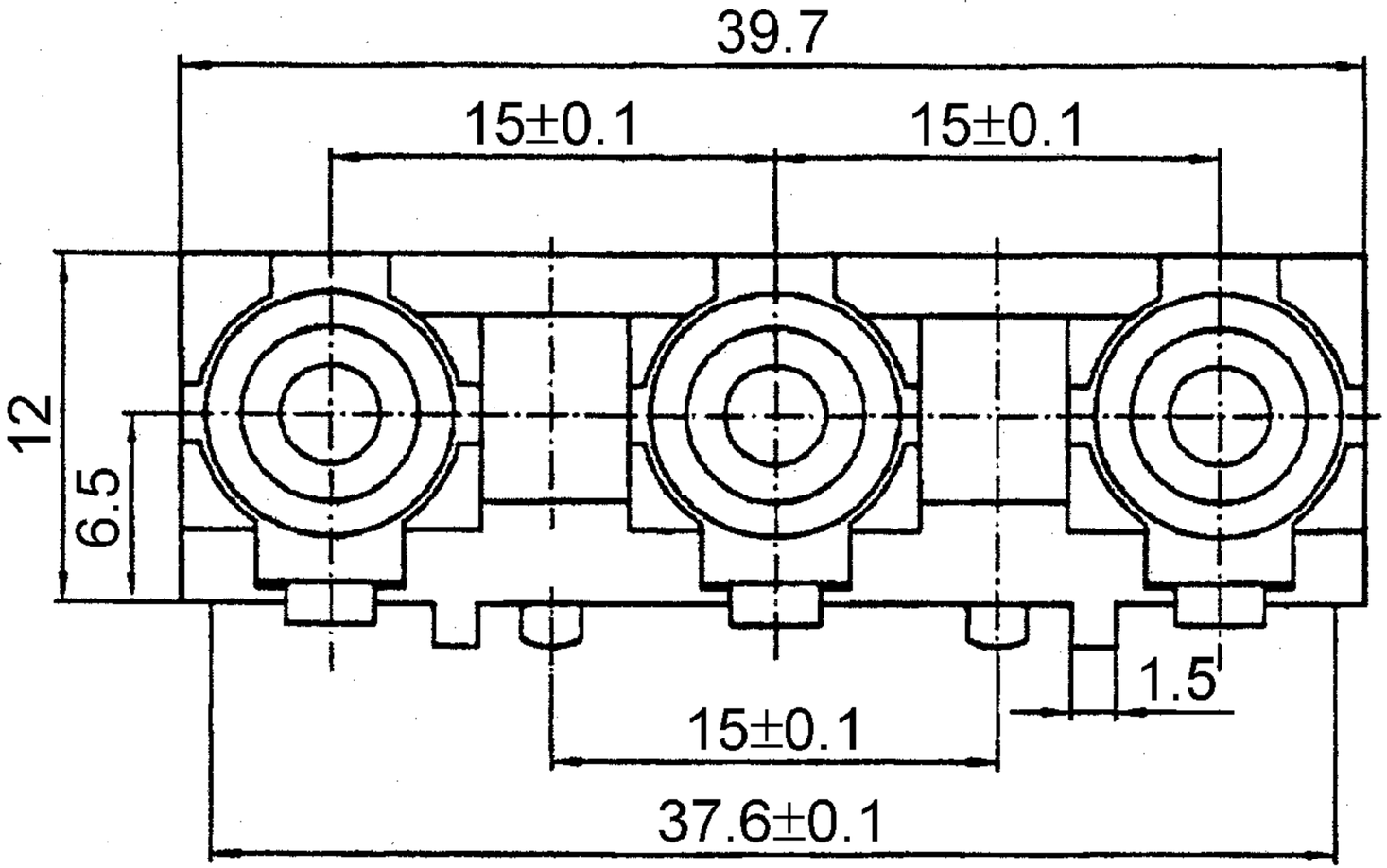
39.7
15±0.1
15±0.1
12
6.5
1.5
15±0.1
37.6±0.1

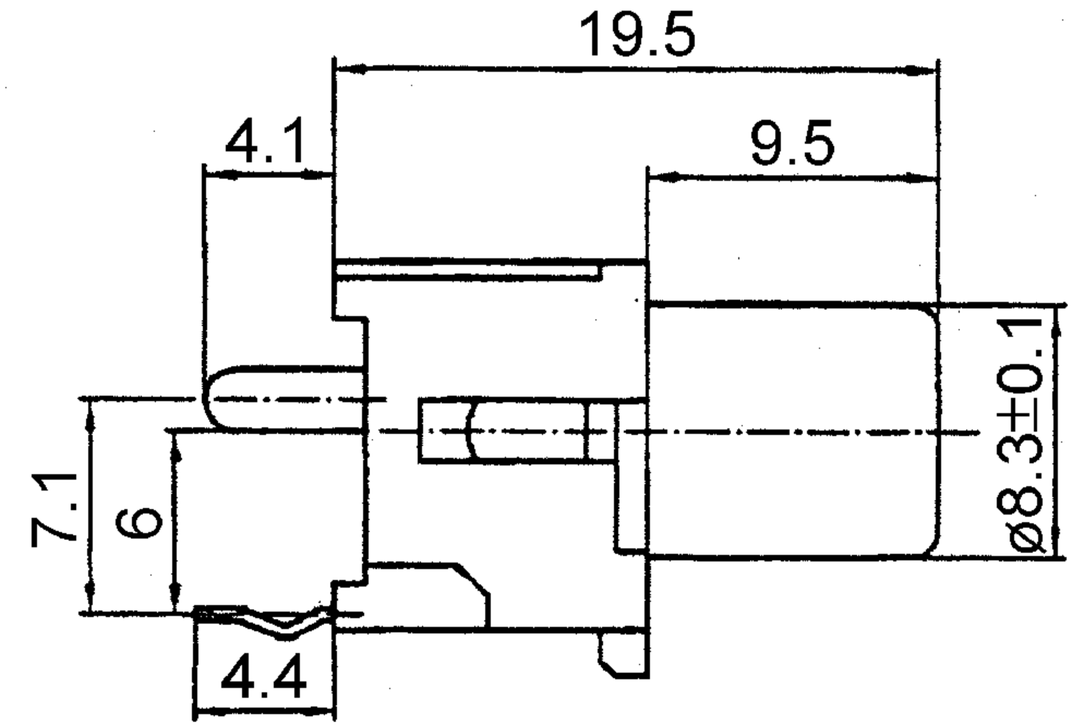
19.5
4.1
9.5
7.1
6
ø8.3±0.1
4.4

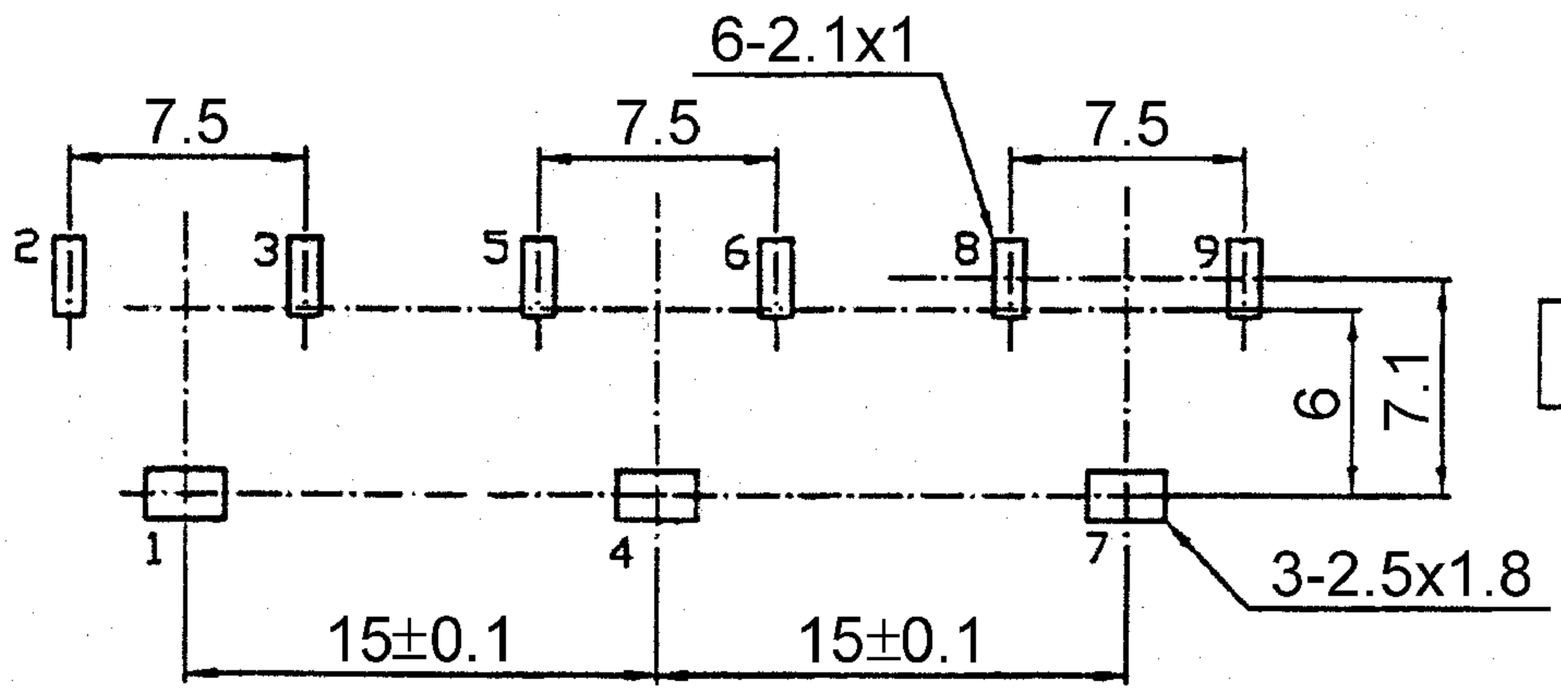
6-2.1x1
7.5
7.5
7.5
2
3
5
6
8
9
6
7.1
1
4
7
3-2.5x1.8
15±0.1
15±0.1

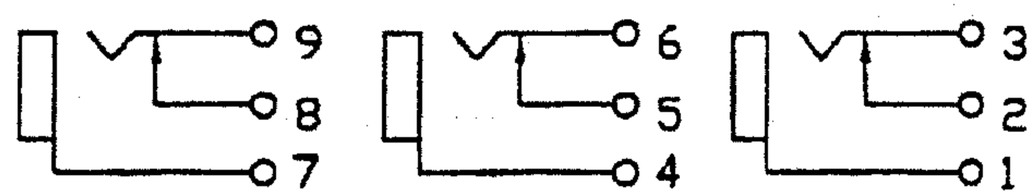
9
8
7
6
5
4
3
2
1