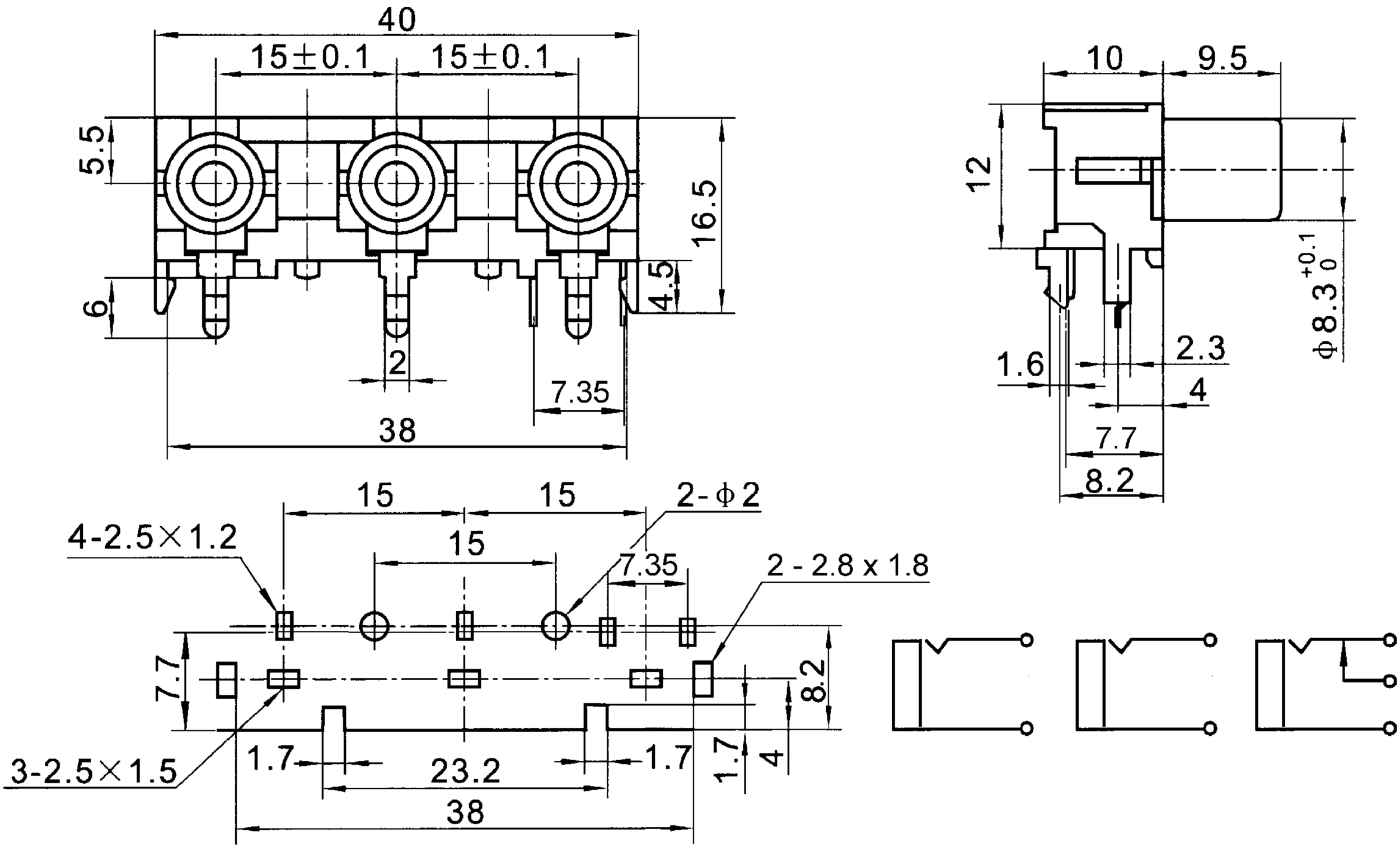
40
15±0.1
15±0.1
5.5
16.5
6
4.5
2
7.35
38
10
9.5
12
φ8.3 +0.1 0
1.6
2.3
4
7.7
8.2
15
15
2-φ2
4-2.5×1.2
15
7.35
2 - 2.8 x 1.8
7.7
8.2
3-2.5×1.5
1.7
23.2
1.7
1.7
4
38