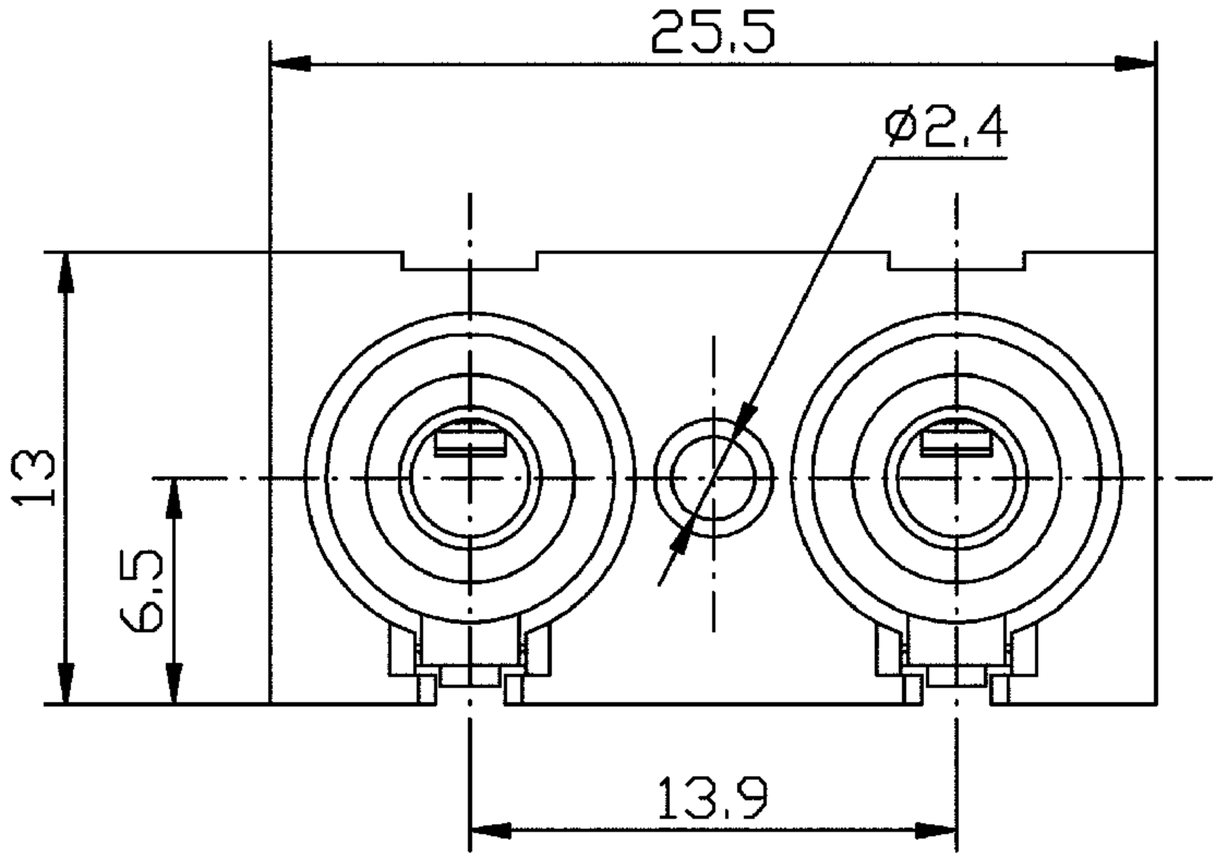
25.5
ø2.4
13
6.5
13.9

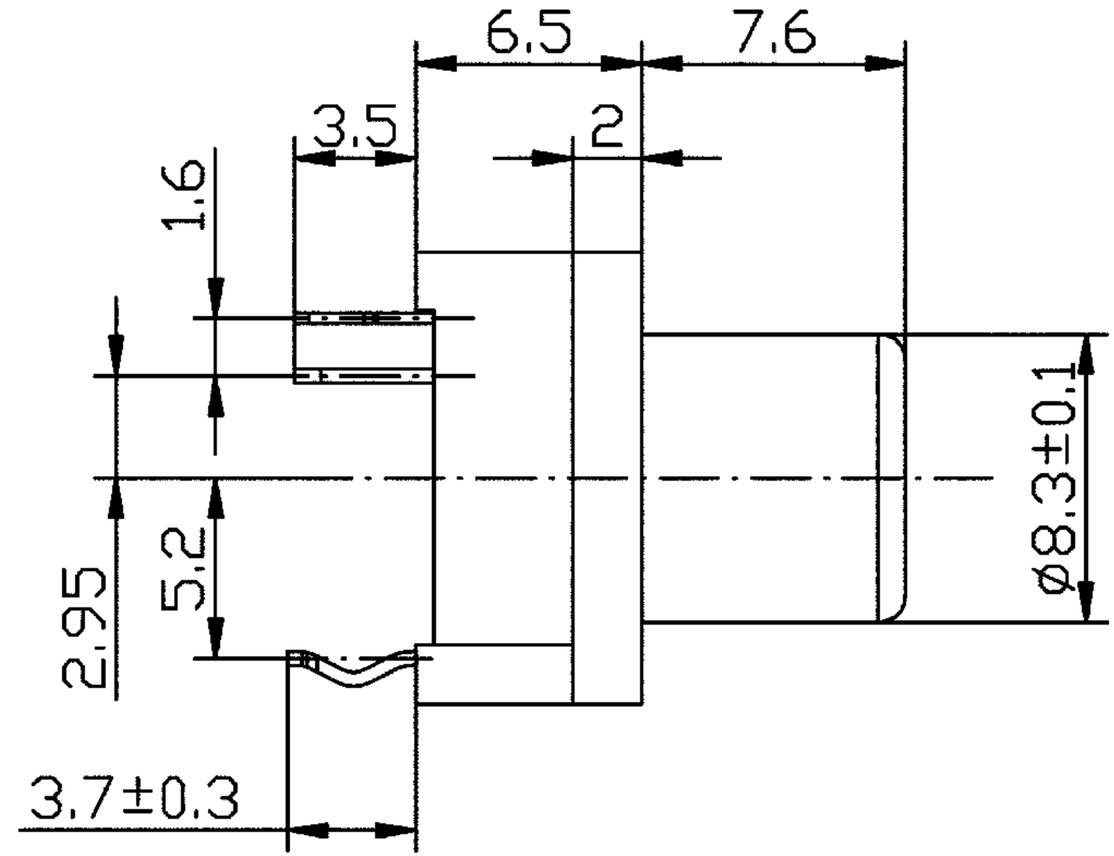
6.5
7.6
3.5
2
1.6
ø8.3±0.1
5.2
2.95
3.7±0.3

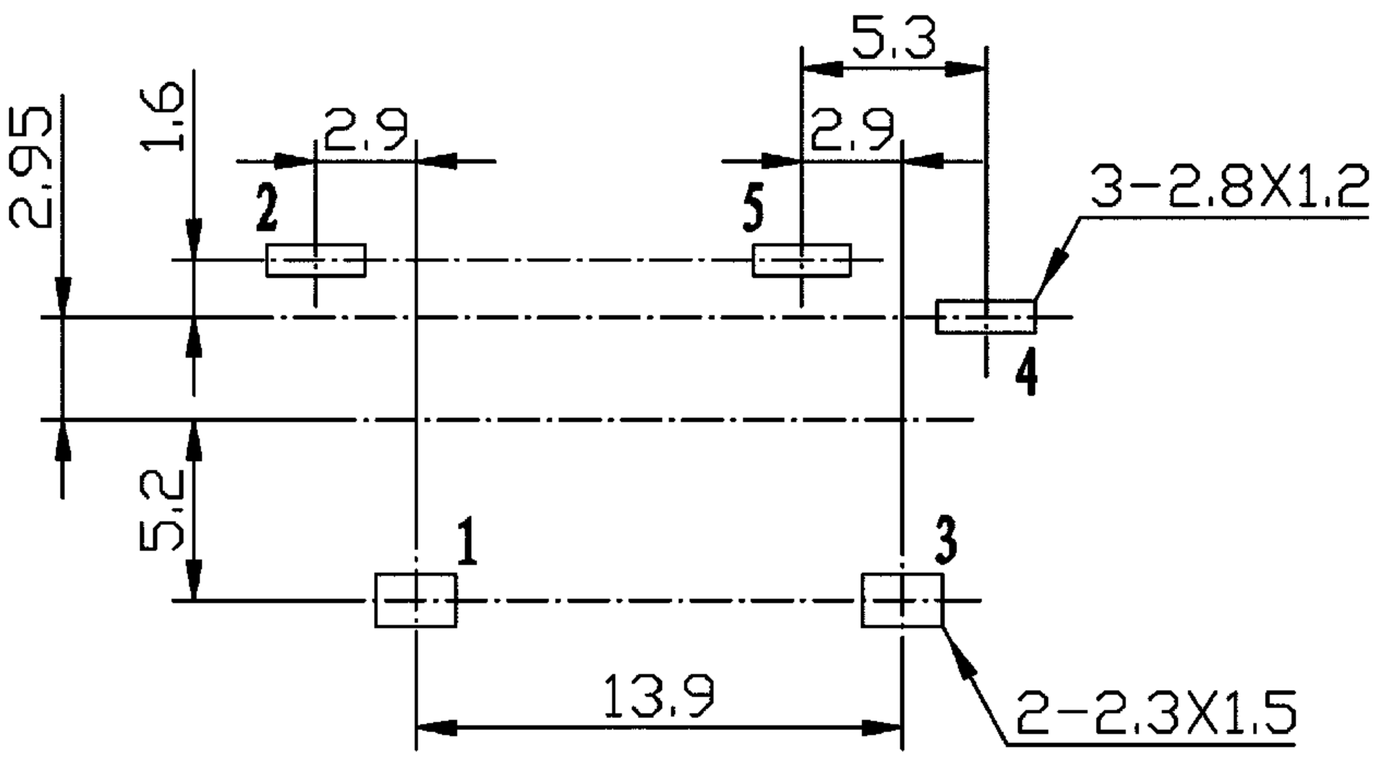
5.3
2.9
2.9
1.6
2.95
2
5
3-2.8X1.2
4
5.2
1
3
13.9
2-2.3X1.5

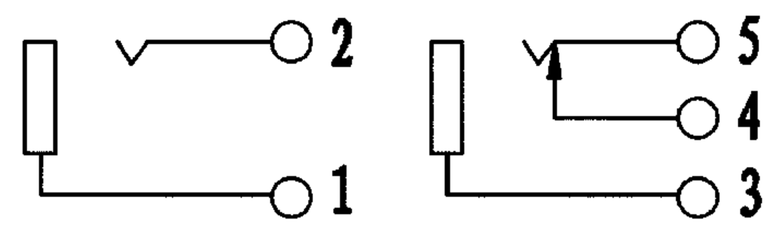
2
1
5
4
3