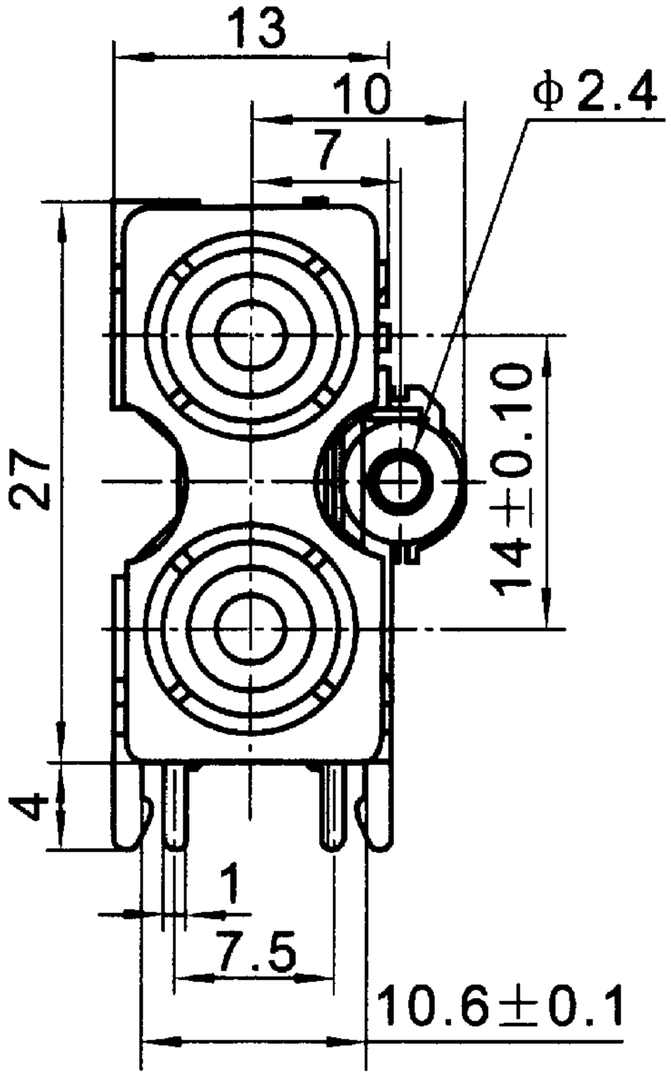
13
10
7
Φ2.4
27
14±0.10
4
1
7.5
10.6±0.1

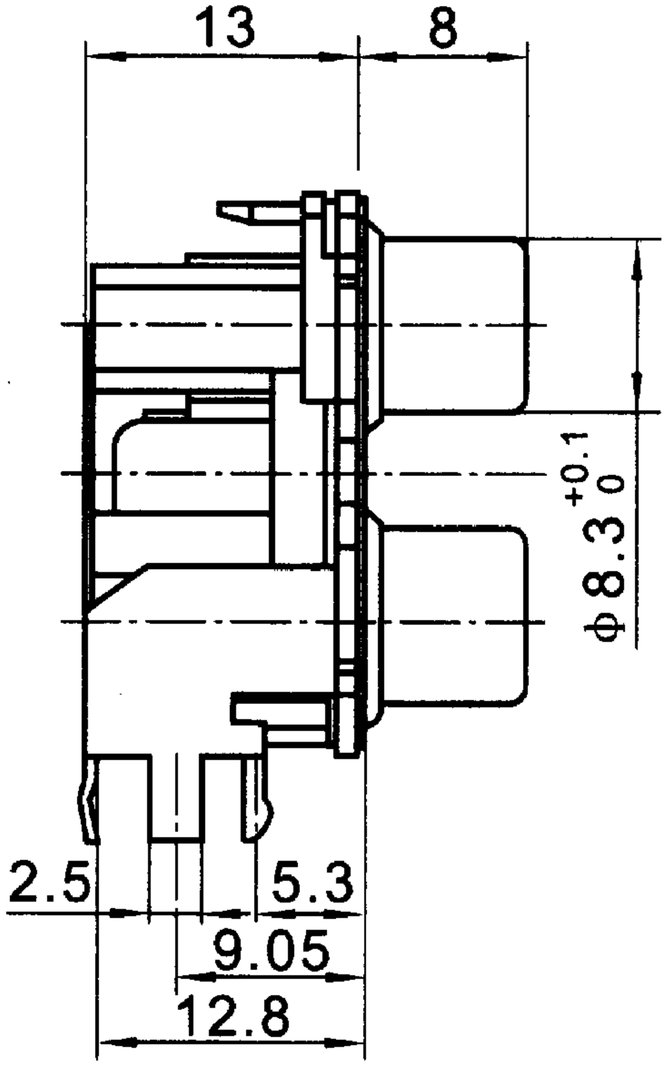
13
8
Φ8.3 +0.1 0
2.5
5.3
9.05
12.8

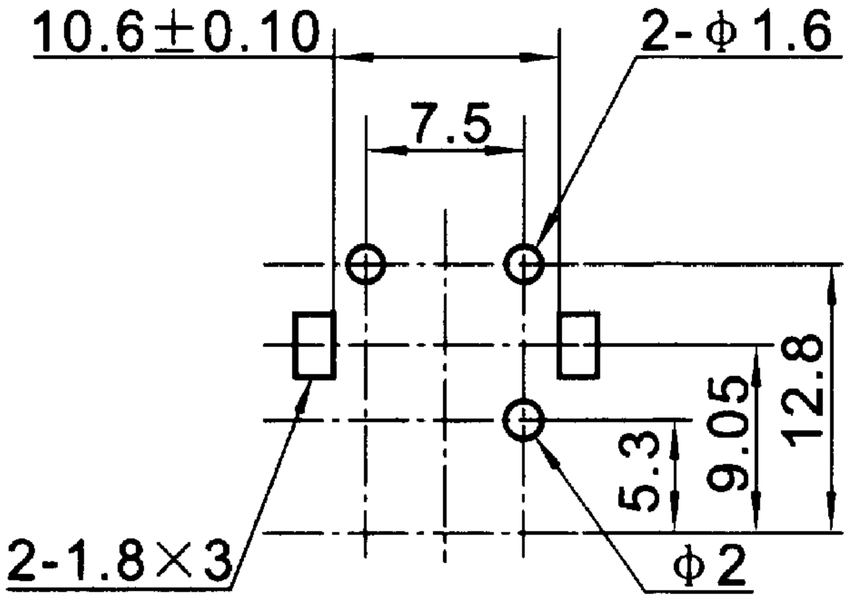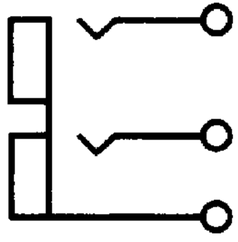
10.6±0.10
2-Φ1.6
7.5
12.8
9.05
5.3
2-1.8×3
Φ2