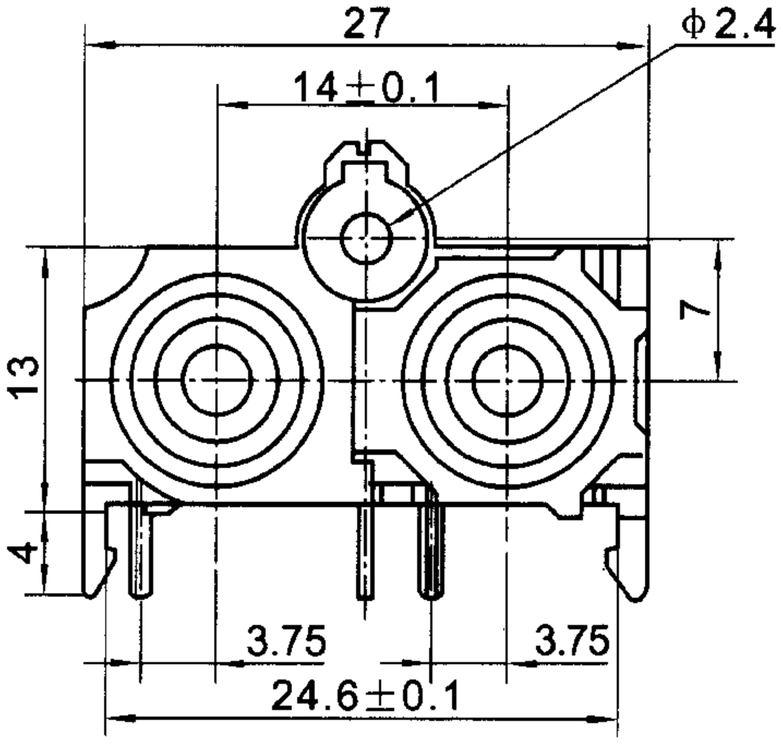
27
14±0.1
φ2.4
13
7
4
3.75
3.75
24.6±0.1

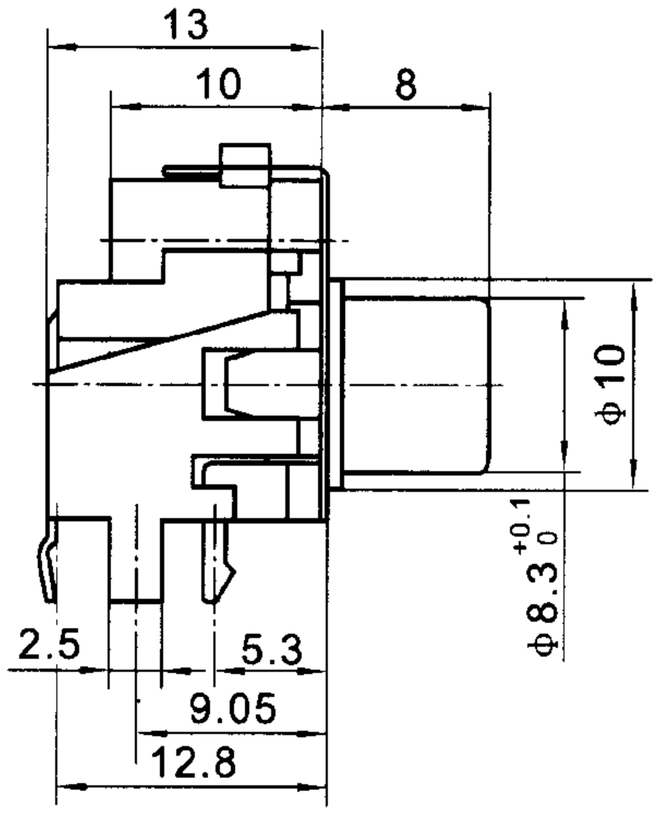
13
10
8
φ10
φ8.3 +0.1 0
2.5
5.3
9.05
12.8

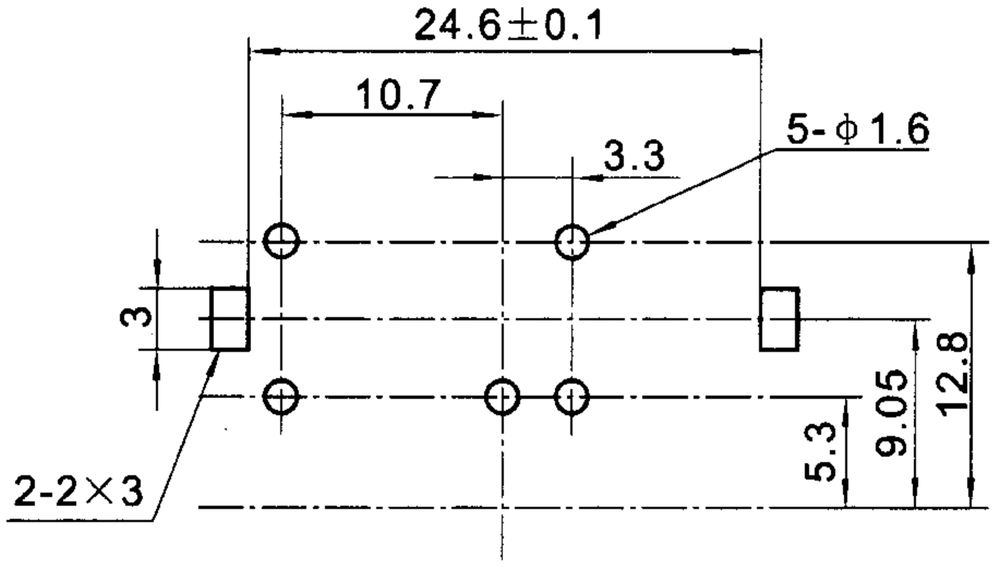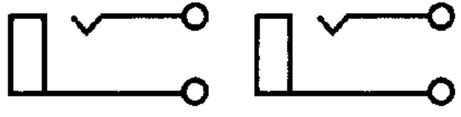
24.6±0.1
10.7
3.3
5-φ1.6
3
2-2×3
5.3
9.05
12.8