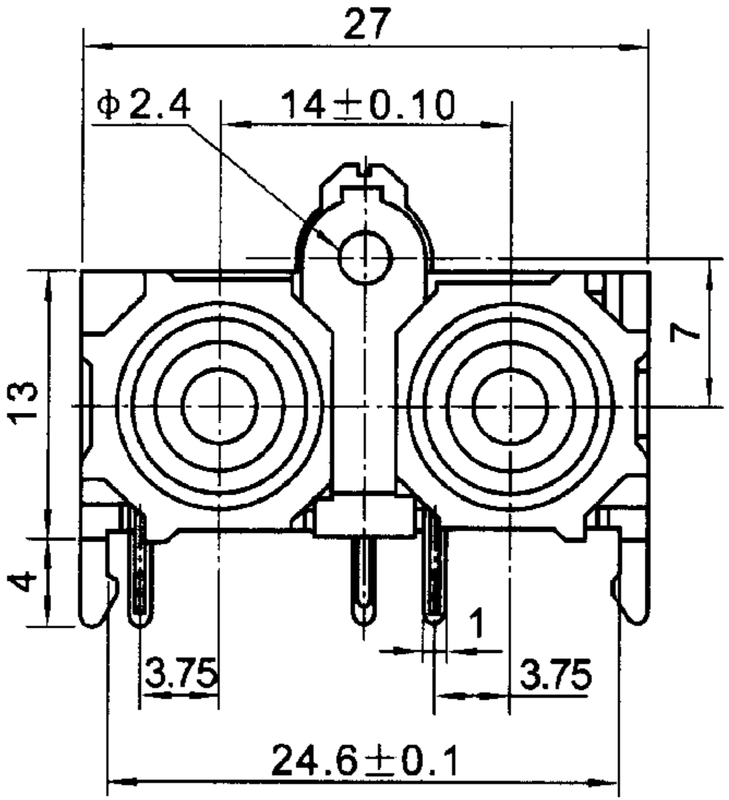
27
Φ2.4
14±0.10
13
7
4
1
3.75
3.75
24.6±0.1

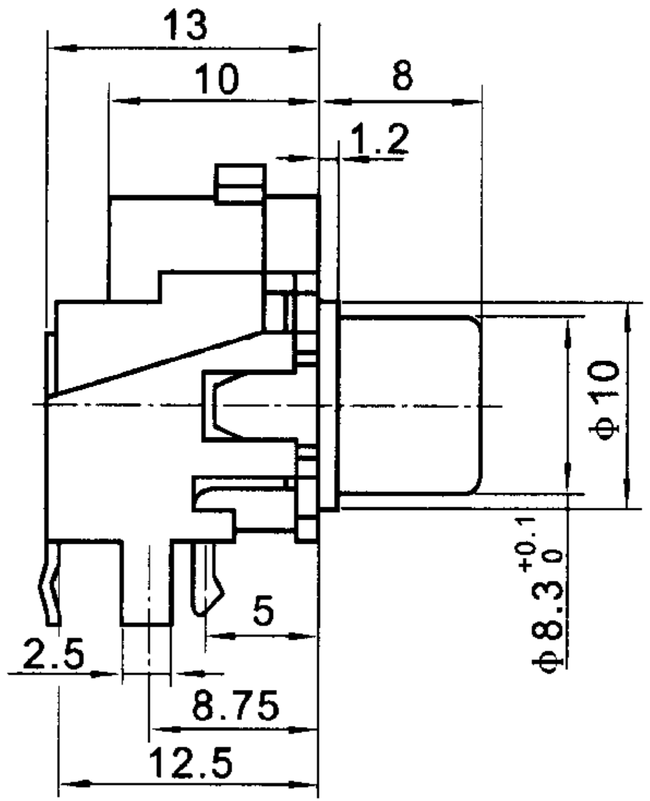
13
10
8
1.2
Φ10
Φ8.3 +0.1 0
5
2.5
8.75
12.5

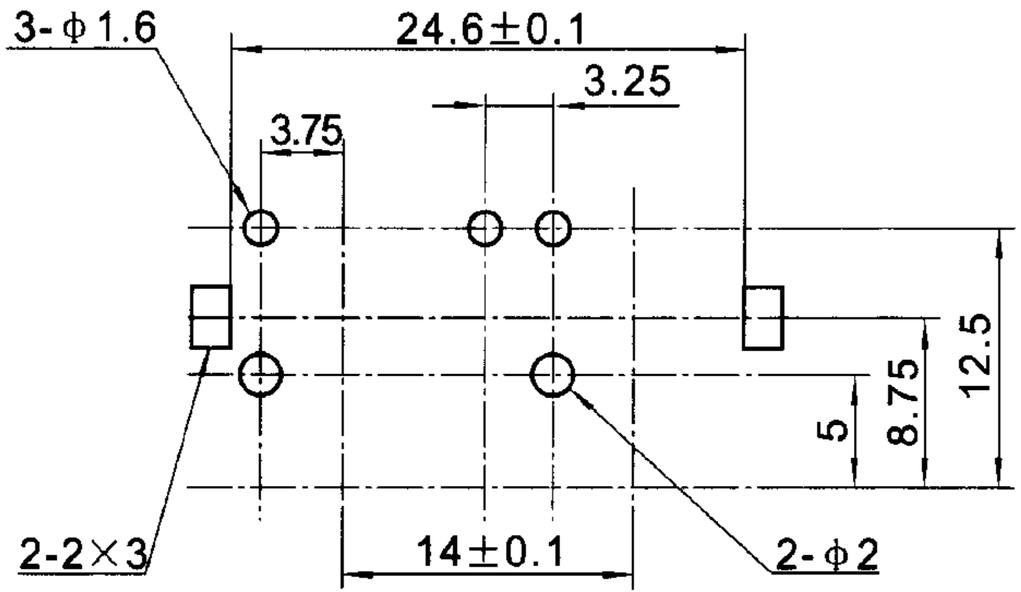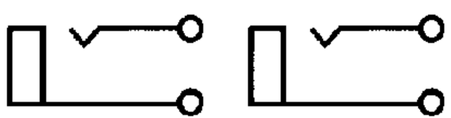
3-Φ1.6
24.6±0.1
3.25
3.75
12.5
8.75
5
2-2×3
14±0.1
2-Φ2