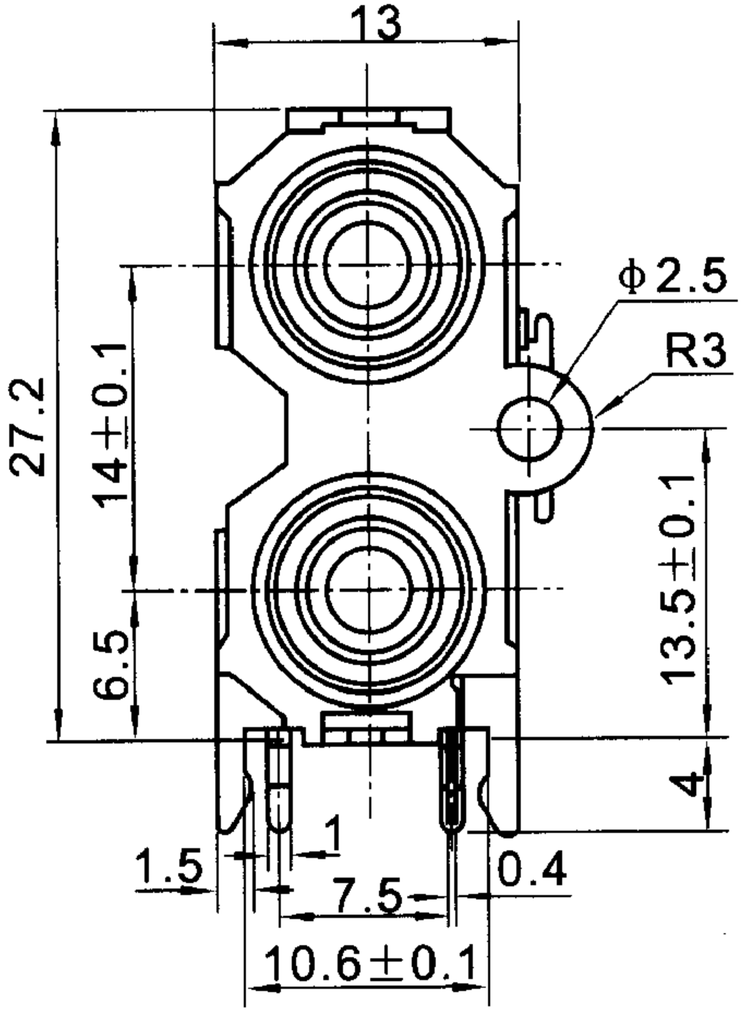
13
27.2
14±0.1
6.5
Φ2.5
R3
13.5±0.1
4
1.5
1
7.5
0.4
10.6±0.1

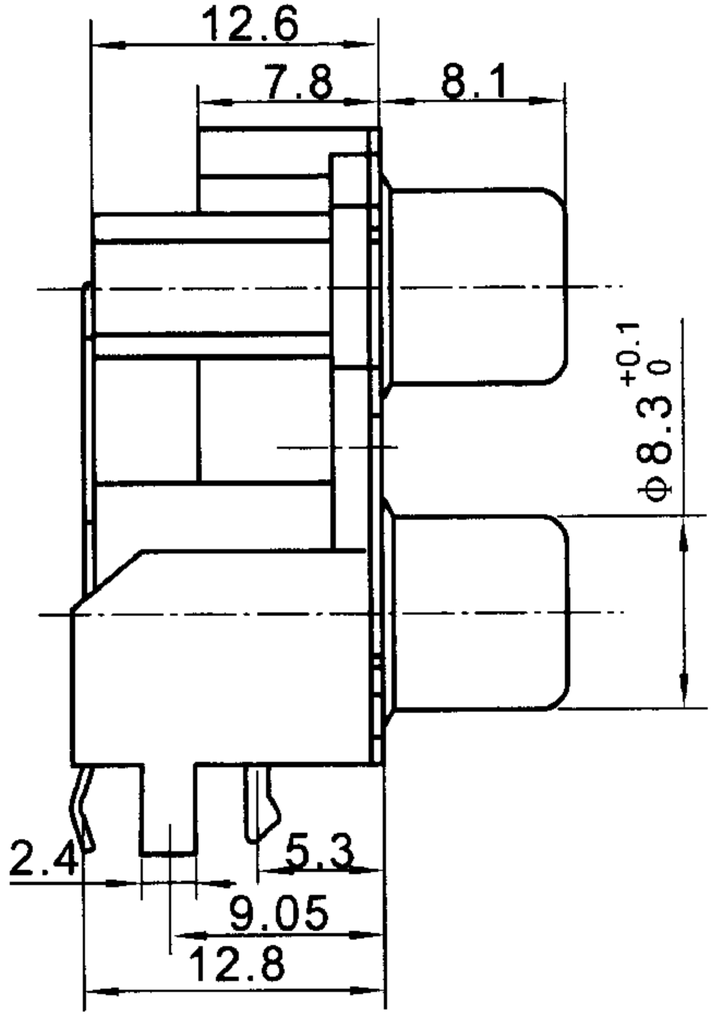
12.6
7.8
8.1
Φ8.3 +0.1 0
2.4
5.3
9.05
12.8

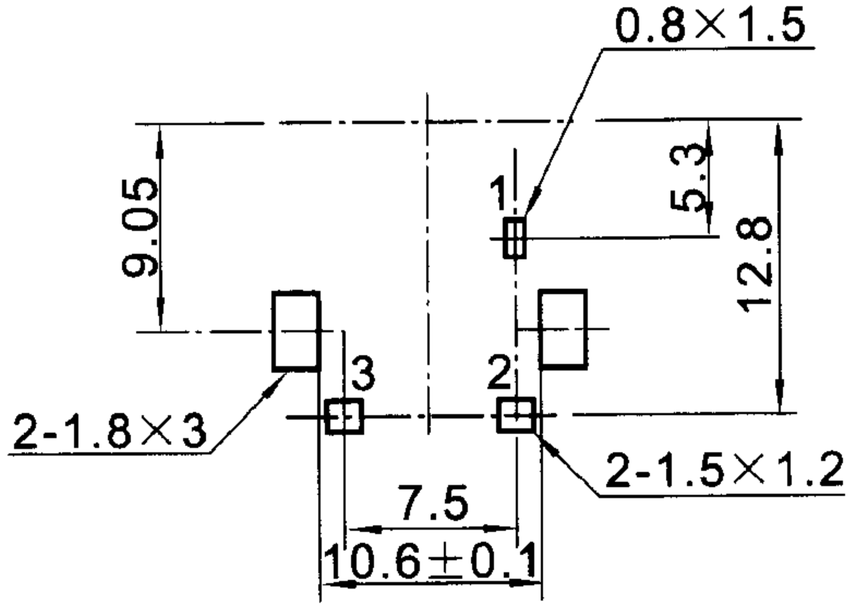
0.8×1.5
9.05
1
5.3
12.8
3
2
2-1.8×3
2-1.5×1.2
7.5
10.6±0.1

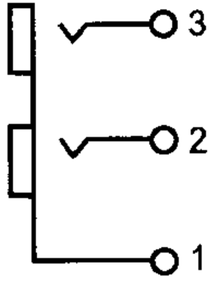
3
2
1