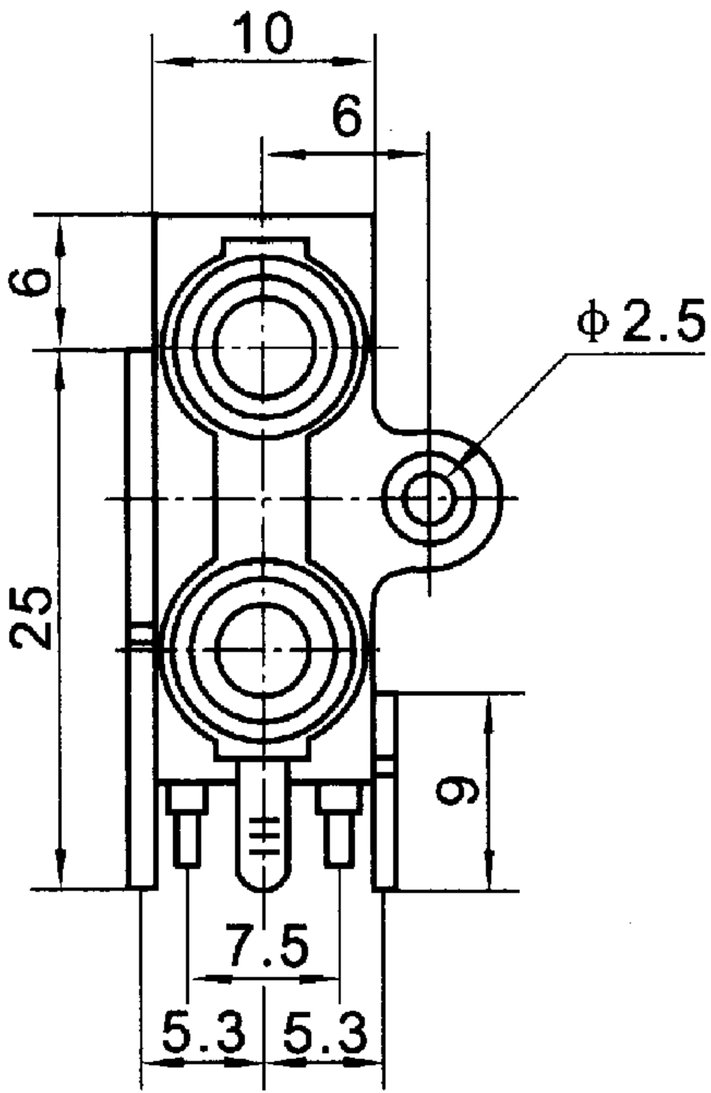
10
6
6
25
9
Φ2.5
7.5
5.3
5.3

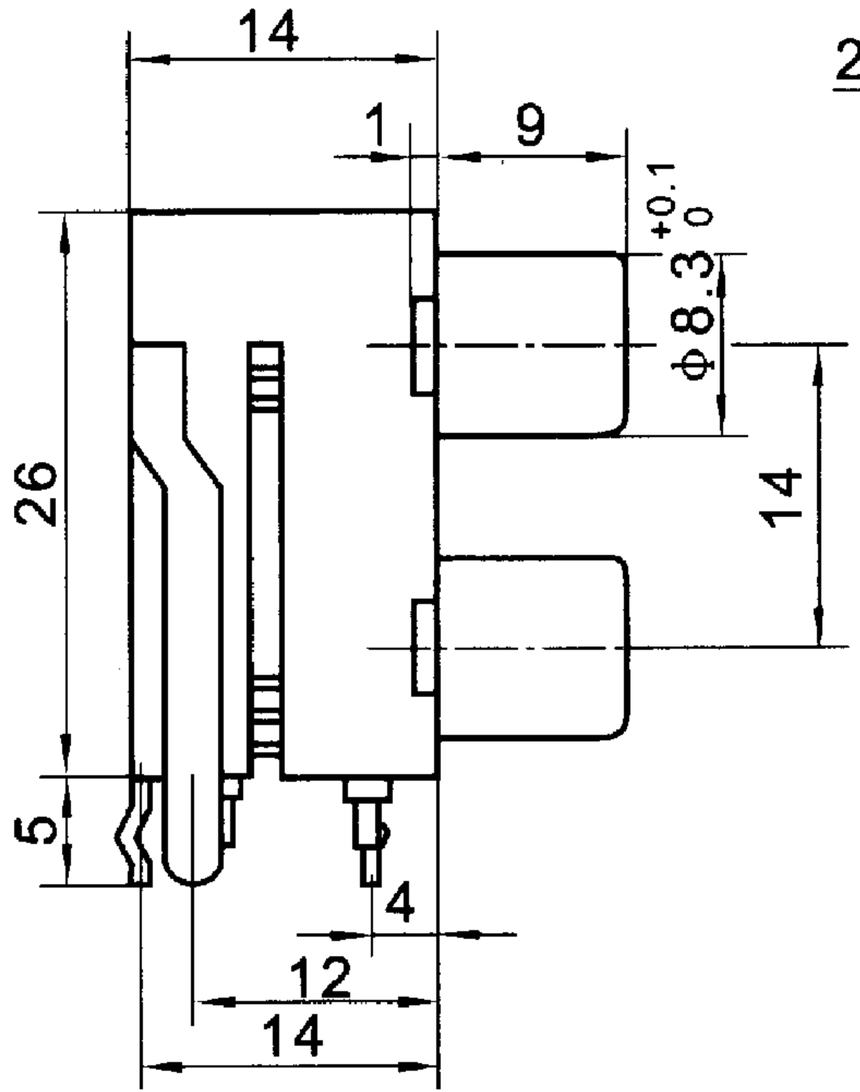
14
1
9
+0.1
0
Φ8.3
26
14
5
4
12
14

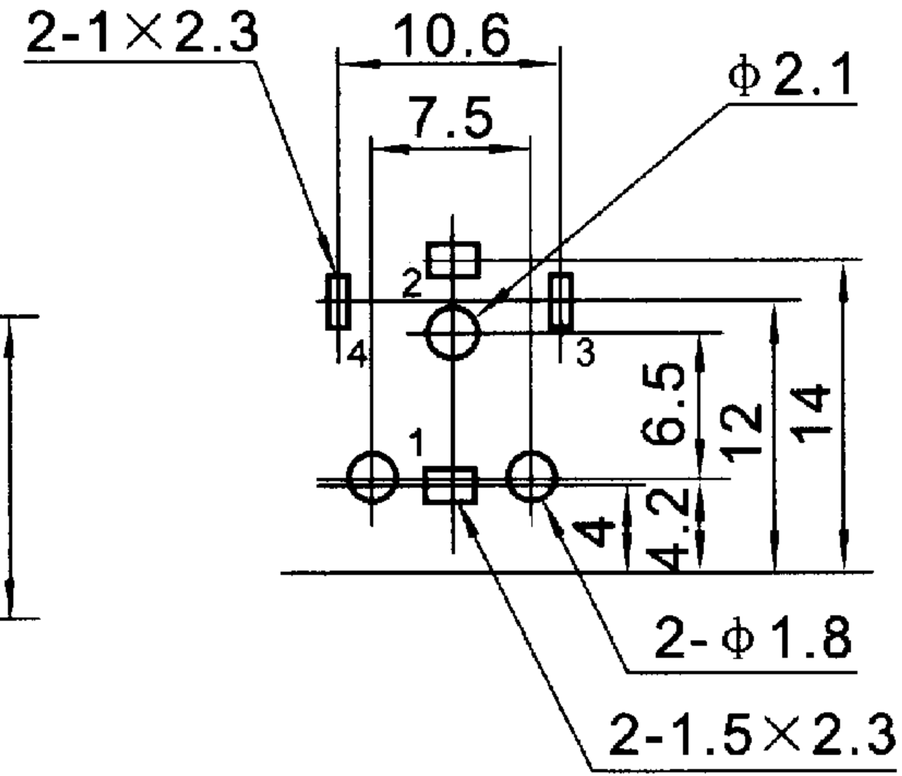
2-1×2.3
10.6
7.5
Φ2.1
2
4
3
1
6.5
12
14
4
4.2
2-Φ1.8
2-1.5×2.3

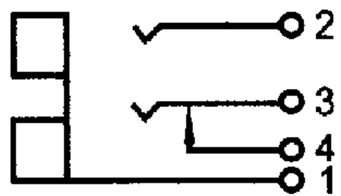
2
3
4
1