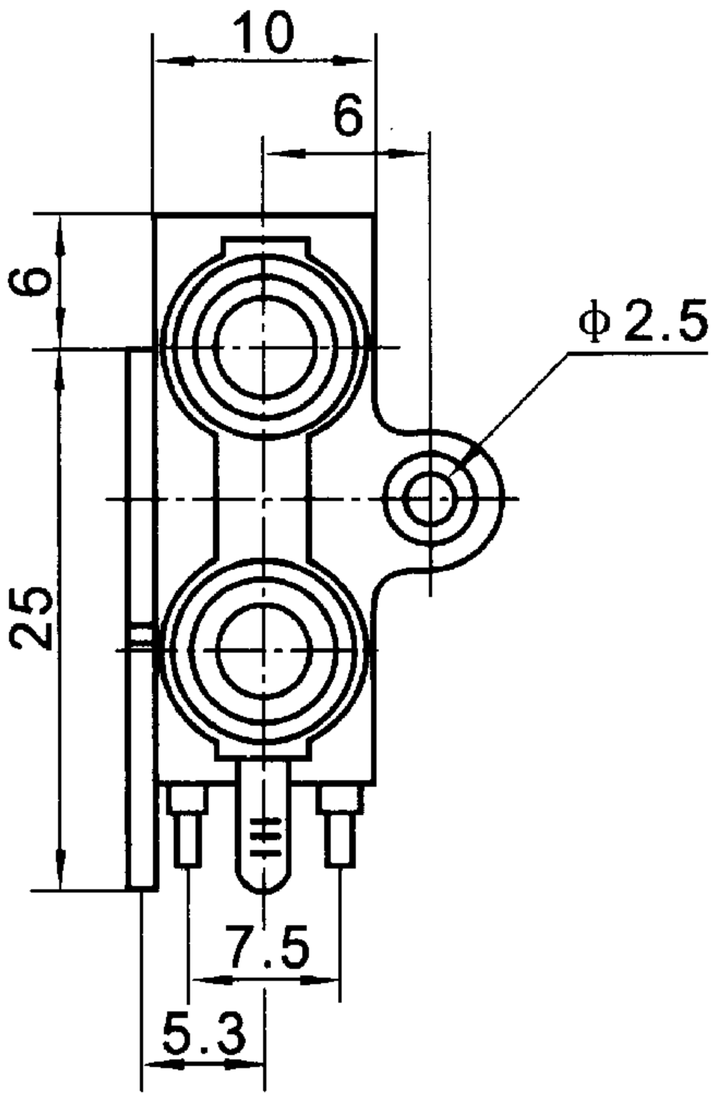
10
6
6
25
φ2.5
7.5
5.3

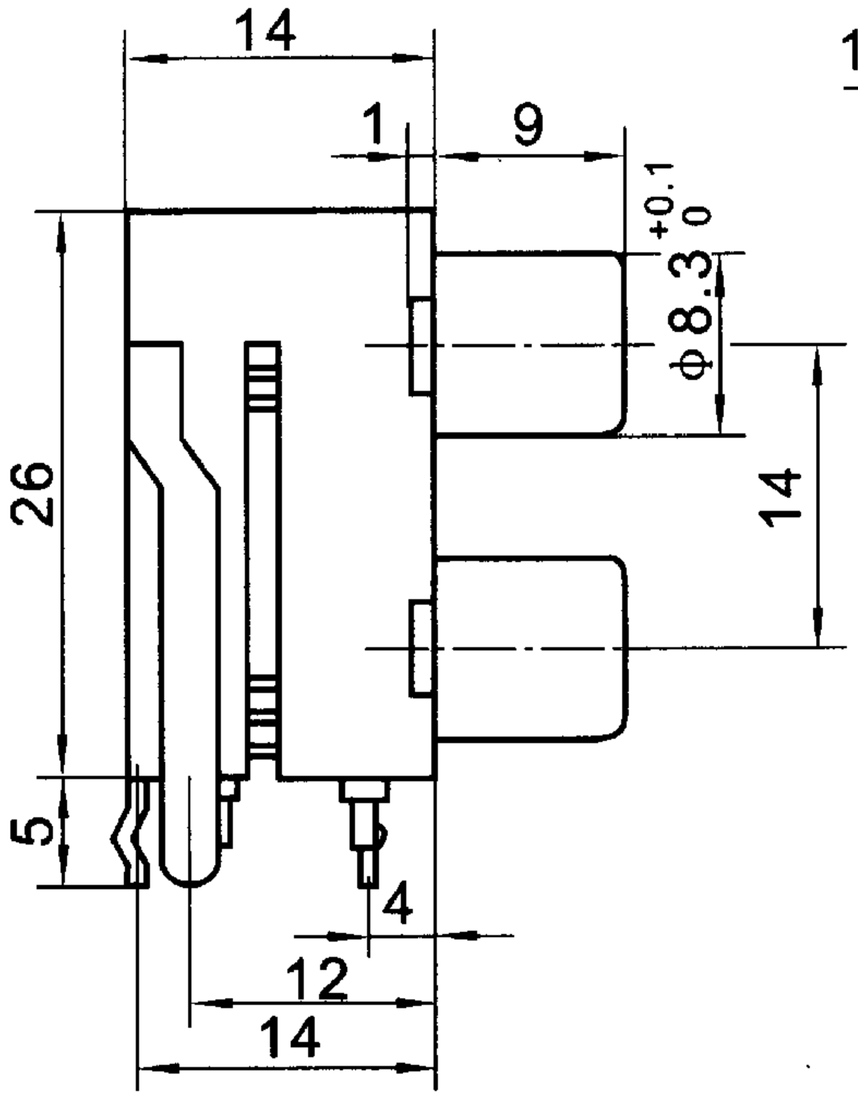
14
1
9
+0.1
0
φ8.3
26
14
5
4
12
14

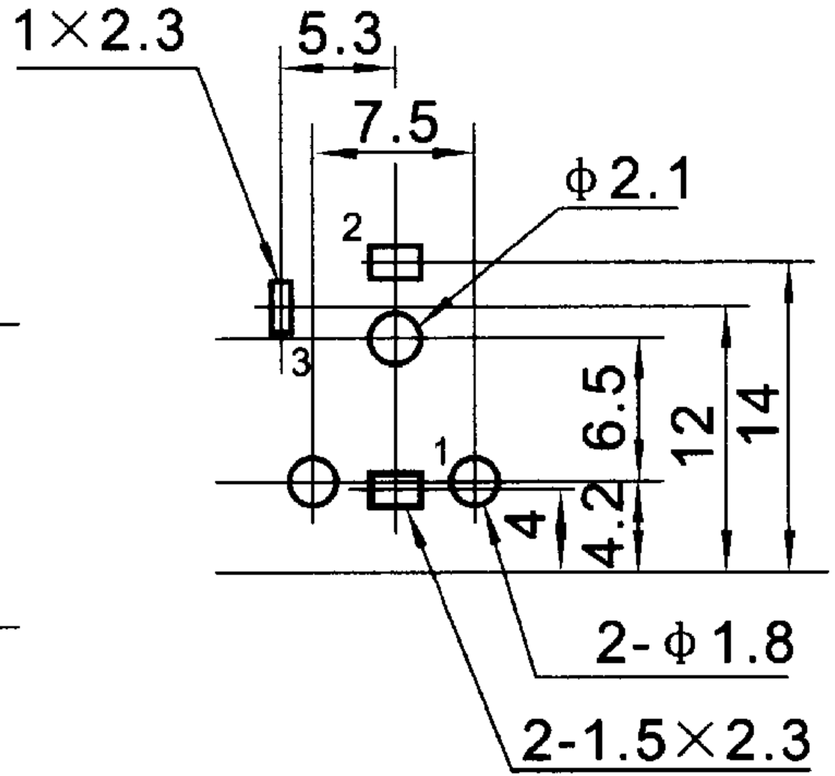
1×2.3
5.3
7.5
φ2.1
2
3
1
6.5
12
14
4
4.2
2-φ1.8
2-1.5×2.3

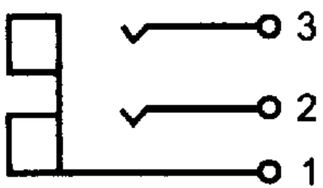
3
2
1