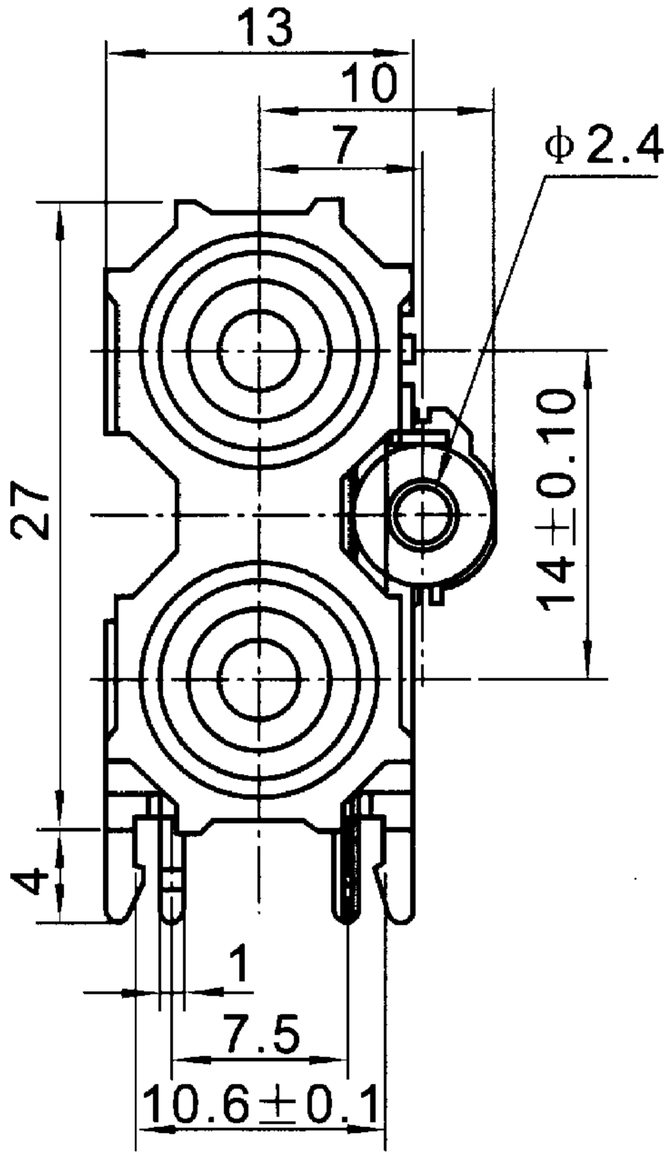
13
10
7
φ2.4
27
14±0.10
4
1
7.5
10.6±0.1

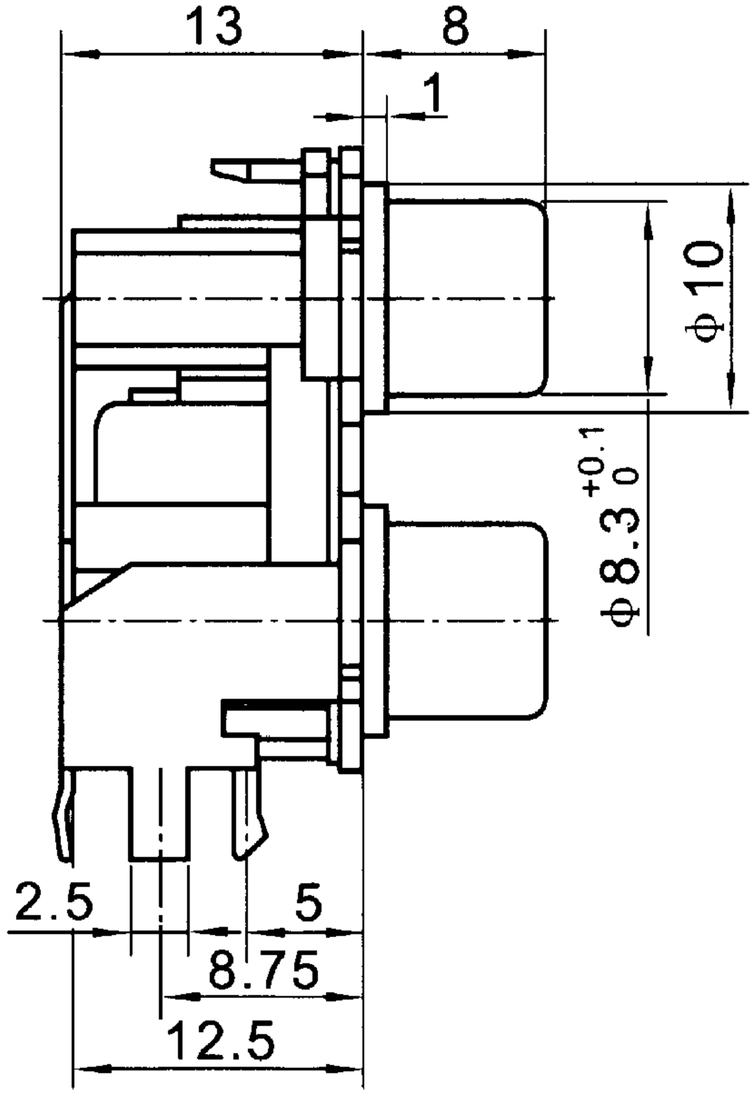
13
8
1
φ10
φ8.3 +0.1 0
2.5
5
8.75
12.5

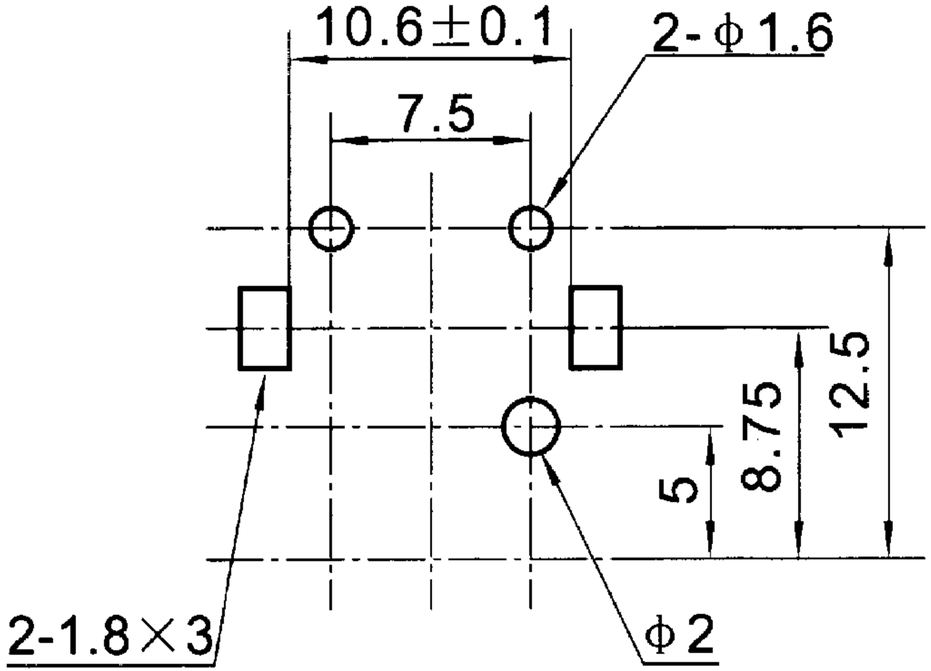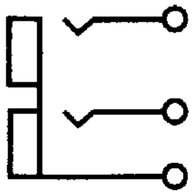
10.6±0.1
2-φ1.6
7.5
12.5
8.75
5
2-1.8×3
φ2