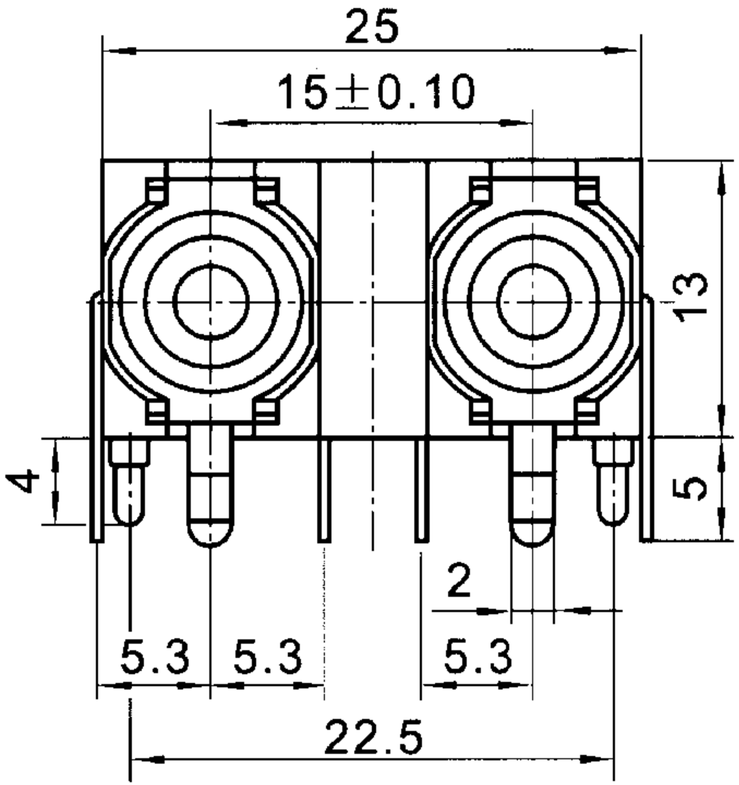
25
15±0.10
13
4
5
2
5.3
5.3
5.3
22.5

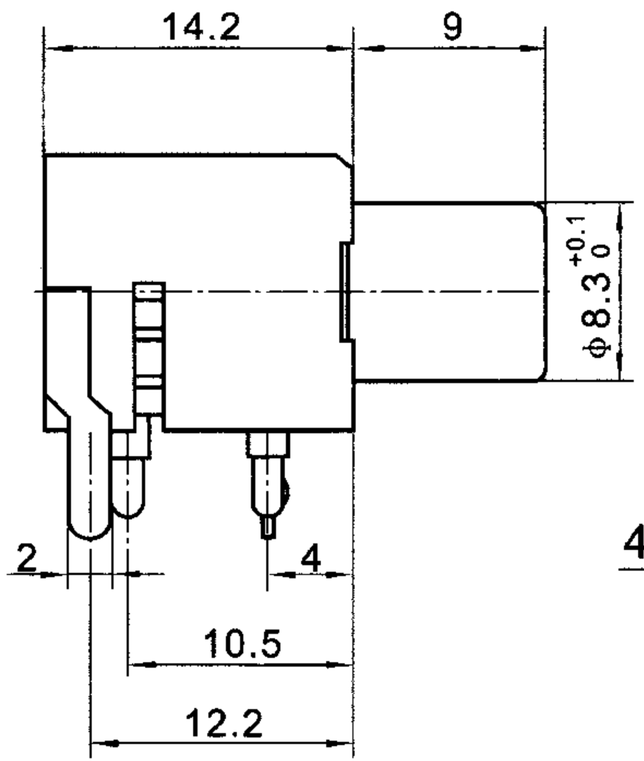
14.2
9
φ8.3 +0.1 0
2
4
10.5
12.2

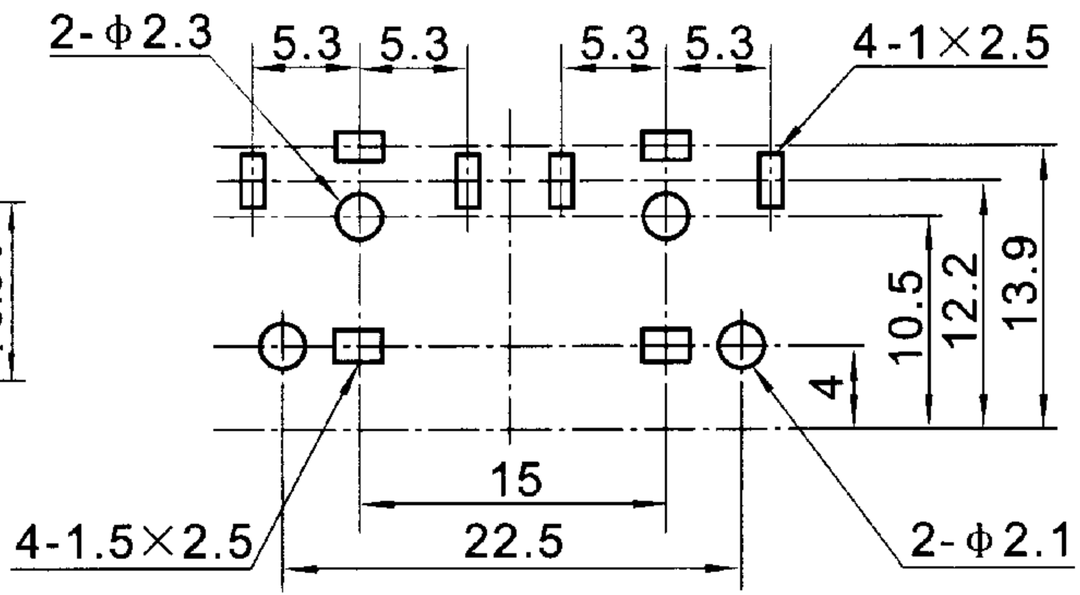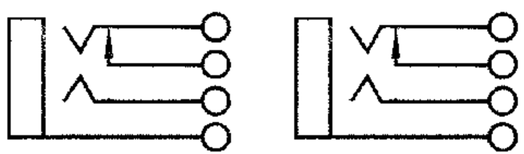
2-φ2.3
5.3
5.3
5.3
5.3
4-1×2.5
10.5
12.2
13.9
4
15
22.5
4-1.5×2.5
2-φ2.1