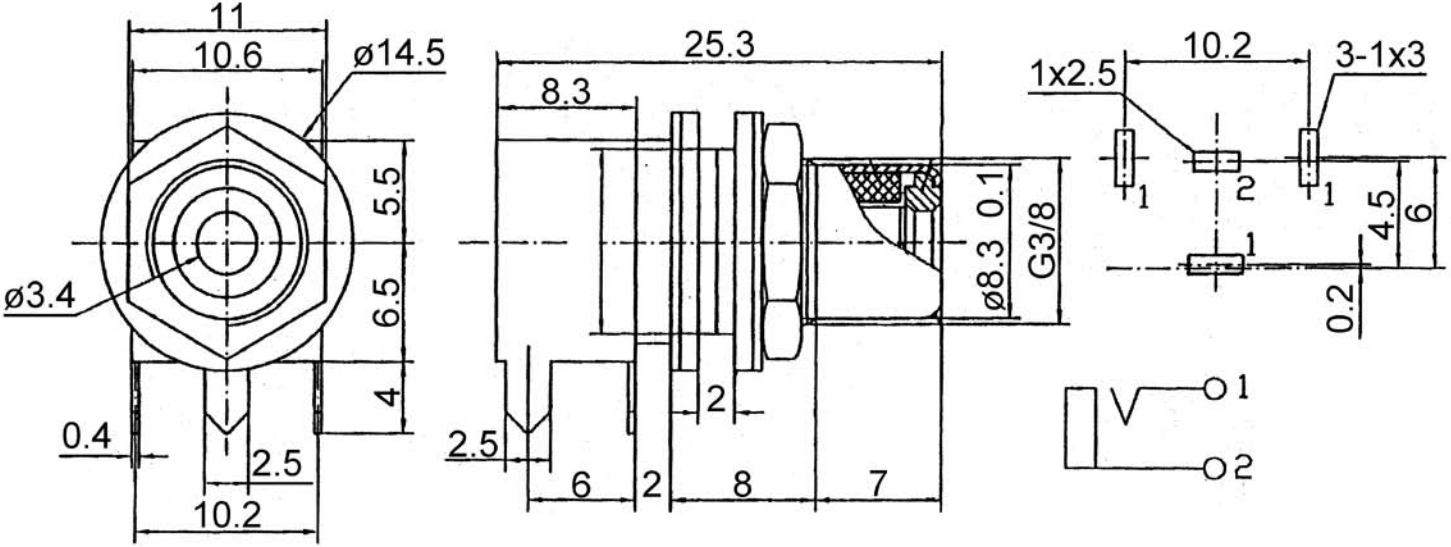
11
10.6
ø14.5
5.5
6.5
4
ø3.4
0.4
2.5
10.2
25.3
8.3
2
2.5
6
2
8
7
ø8.3 0.1
G3/8
10.2
1x2.5
3-1x3
1
2
1
1
4.5
6
0.2
1
2