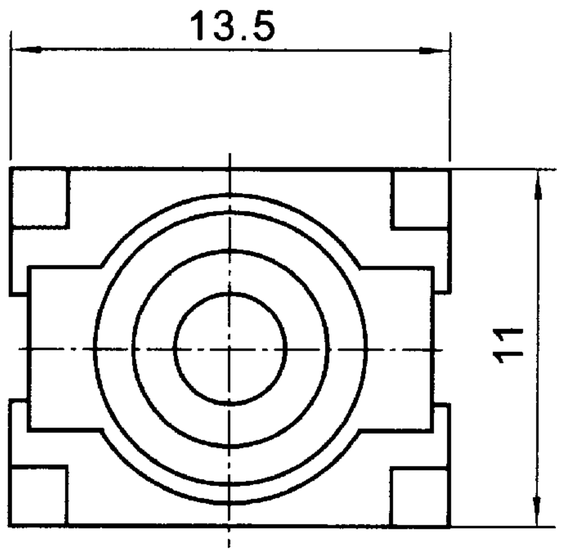
13.5
11

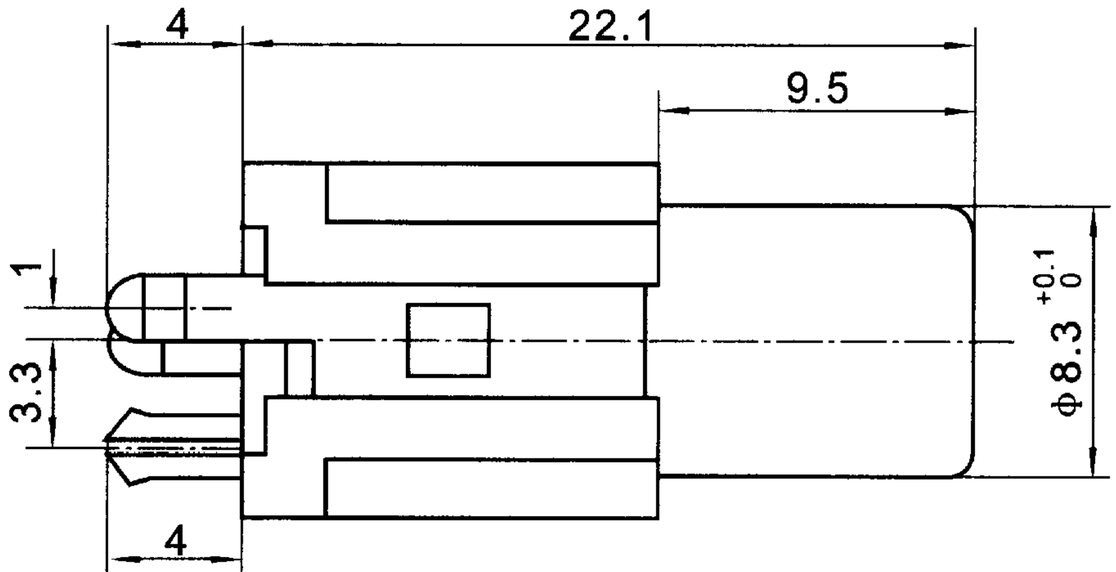
4
22.1
9.5
1
3.3
4
Φ8.3 +0.1 0

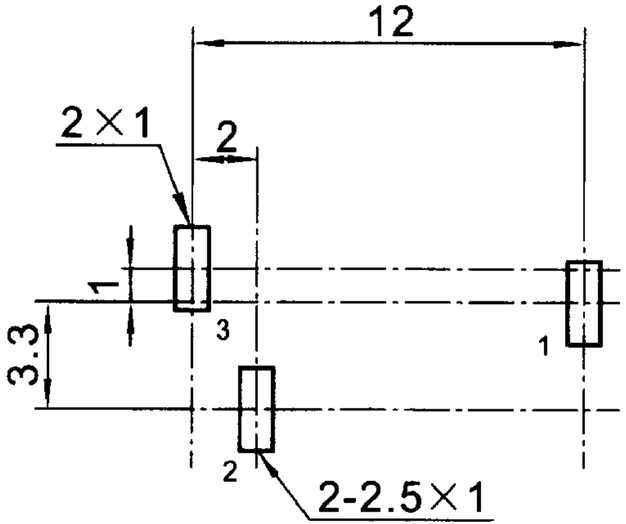
12
2×1
2
1
3.3
3
1
2
2-2.5×1

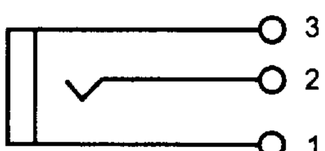
3
2
1