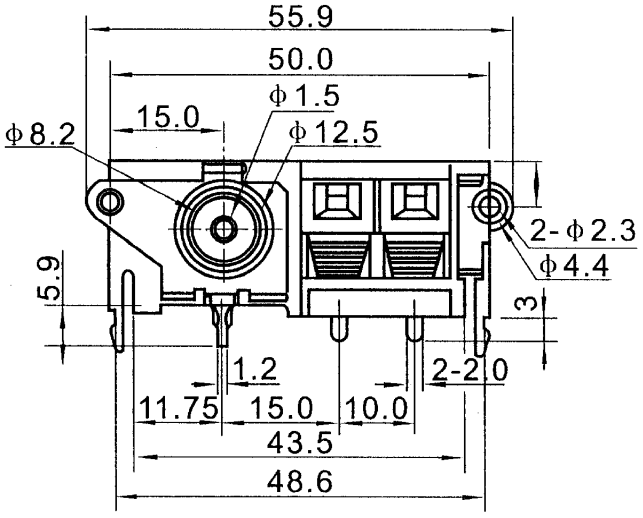
55.9
50.0
15.0
φ1.5
φ12.5
φ8.2
2-φ2.3
φ4.4
5.9
3
1.2
2-2.0
11.75
15.0
10.0
43.5
48.6

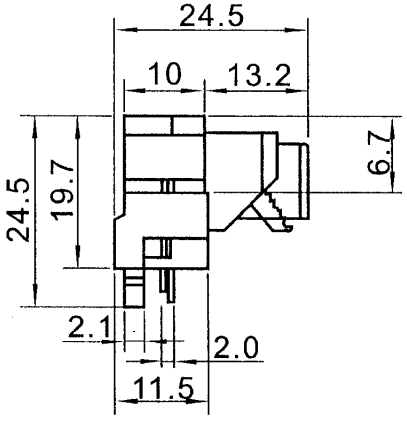
24.5
10
13.2
6.7
24.5
19.7
2.1
2.0
11.5

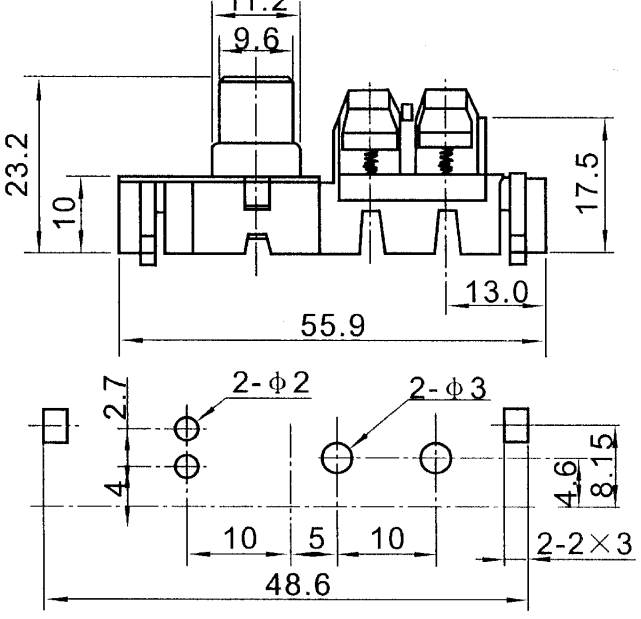
11.2
9.6
23.2
10
17.5
13.0
55.9
2.7
2-φ2
2-φ3
4
4.6
8.15
10
5
10
2-2×3
48.6