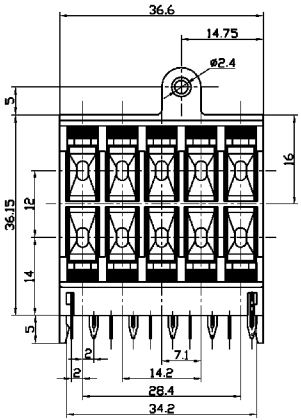

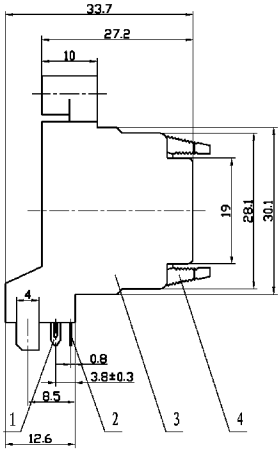

Dimensions of PC board hole(commend)
Bottom View(t=1.6mm)

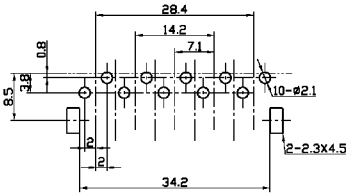

Model No. PT-1002