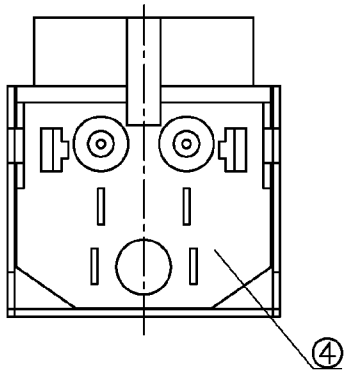

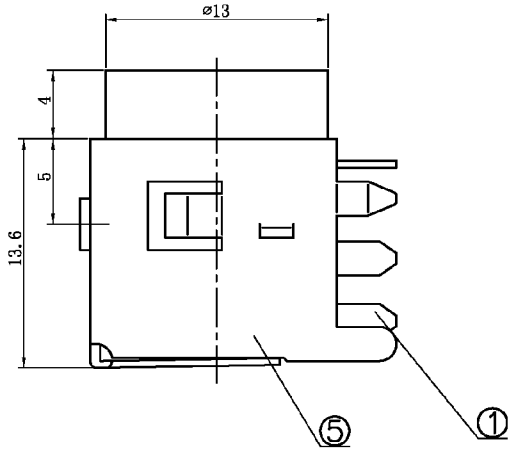

SCHEMATIC

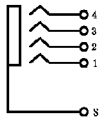

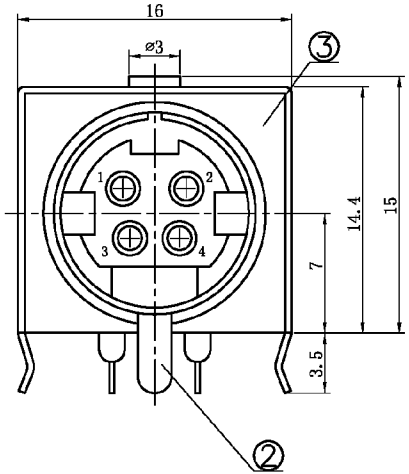

PCB LAYOUT
(BOTTOM VIEW)

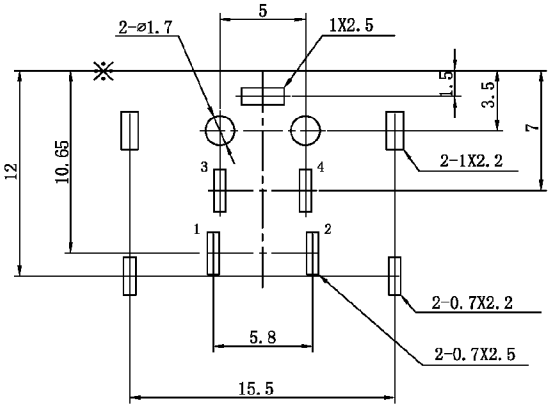

Model No. MD-604BS