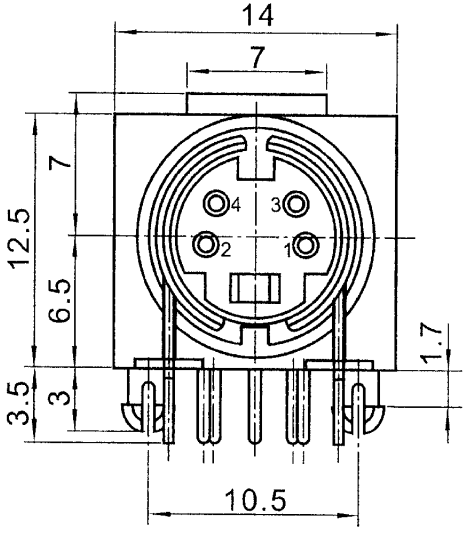
14
7
7
12.5
6.5
3.5
3
1.7
4
3
2
1
10.5

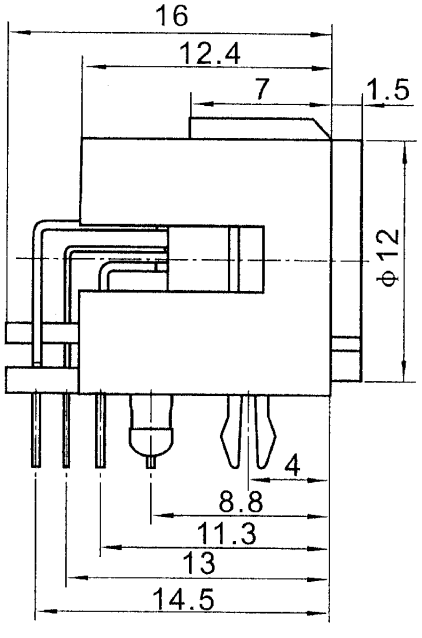
16
12.4
7
1.5
φ12
4
8.8
11.3
13
14.5

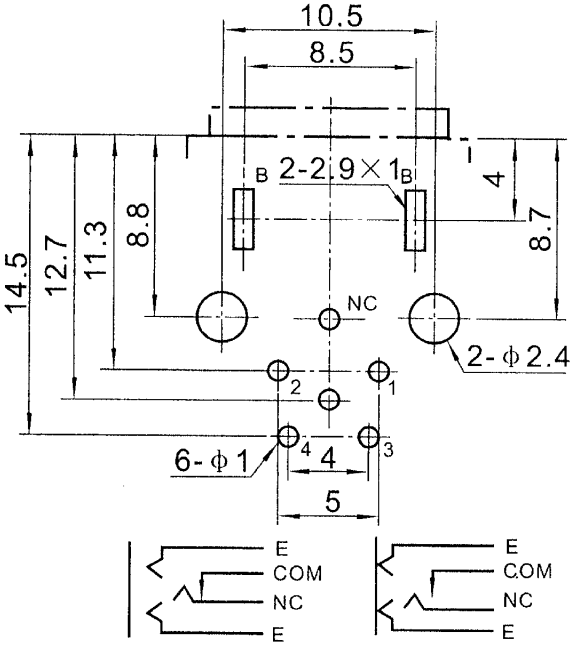
10.5
8.5
B
2-2.9×1
B
4
8.7
8.8
11.3
12.7
14.5
NC
2-φ2.4
2
1
6-φ1
4
4
3
5
E
COM
NC
E
E
COM
NC
E