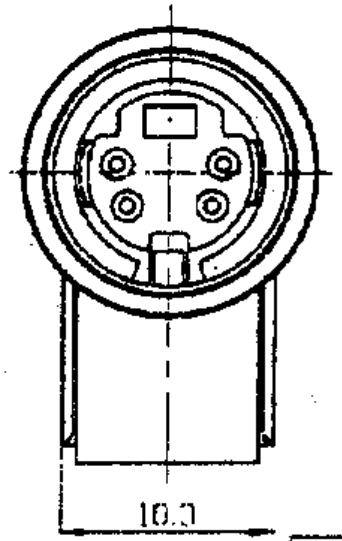


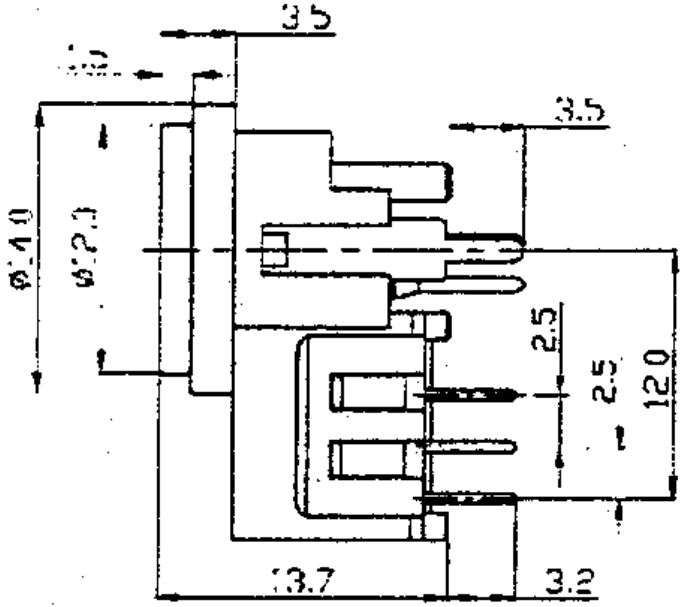


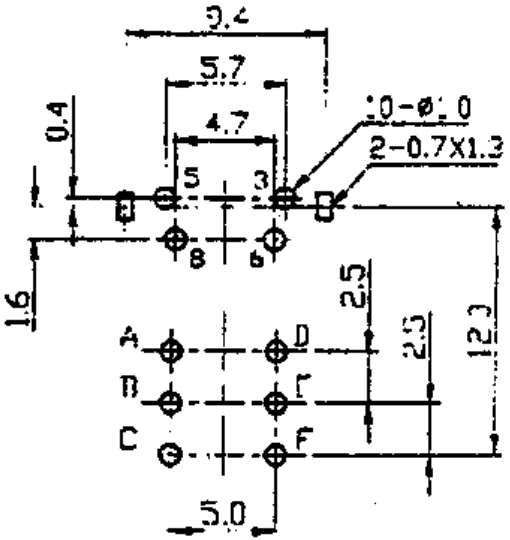

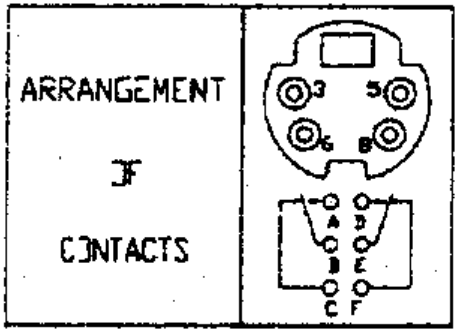
P.C.B LAYOUT
(BOTTOM VIEW)