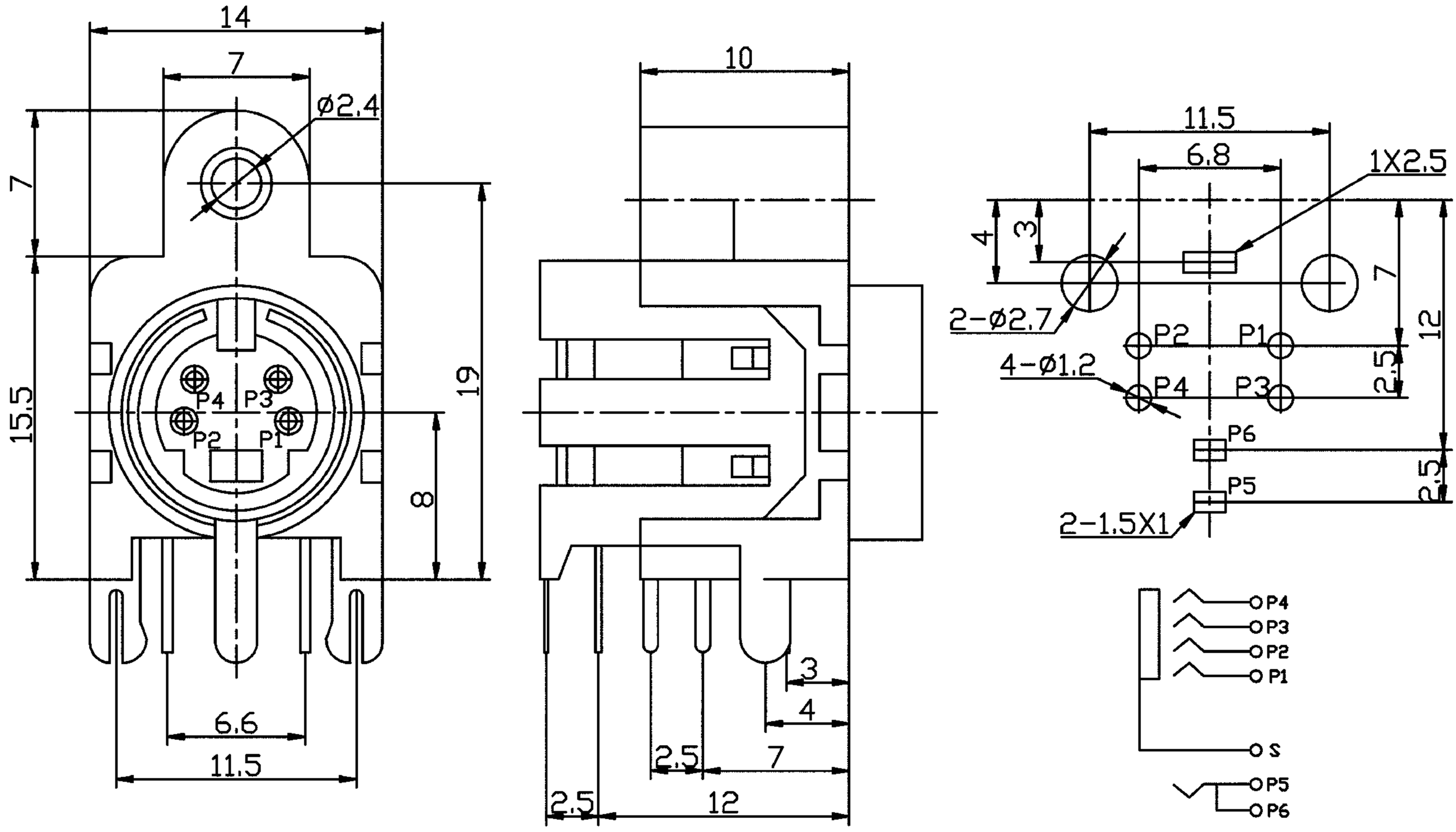
14
7
Ø2.4
7
15.5
19
8
P4
P3
P2
P1
6.6
11.5
10
3
4
2.5
7
2.5
12
11.5
6.8
1X2.5
4
3
7
12
2-Ø2.7
P2
P1
4-Ø1.2
P4
P3
2.5
P6
P5
2.5
2-1.5X1
P4
P3
P2
P1
S
P5
P6