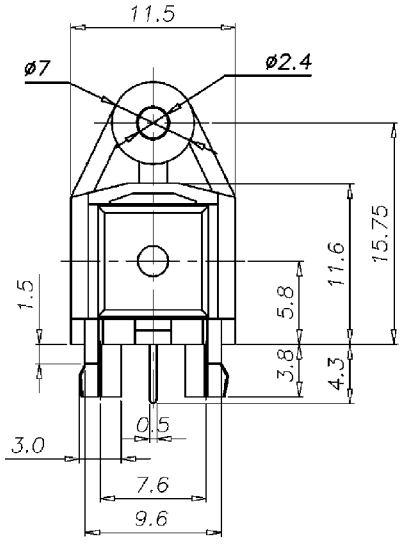

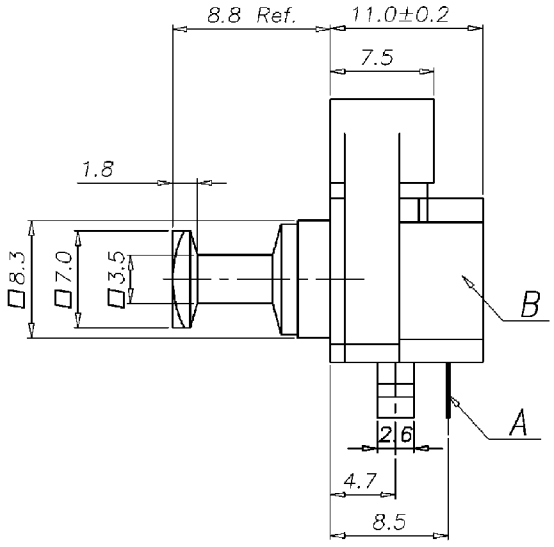

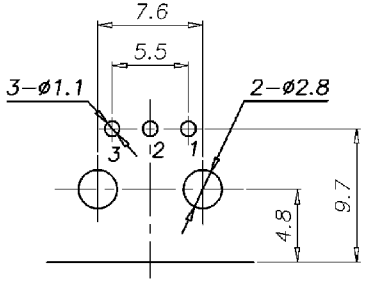

Recommend PCB Layout
Jack Top View

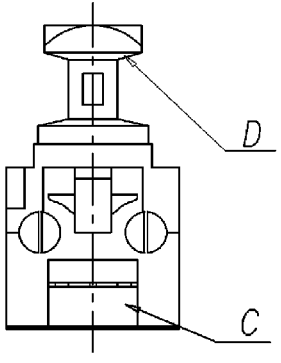

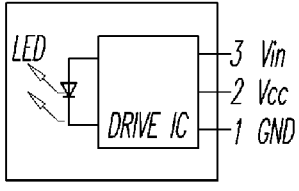

Inernal equivalent circuit

Model No. GQ-03