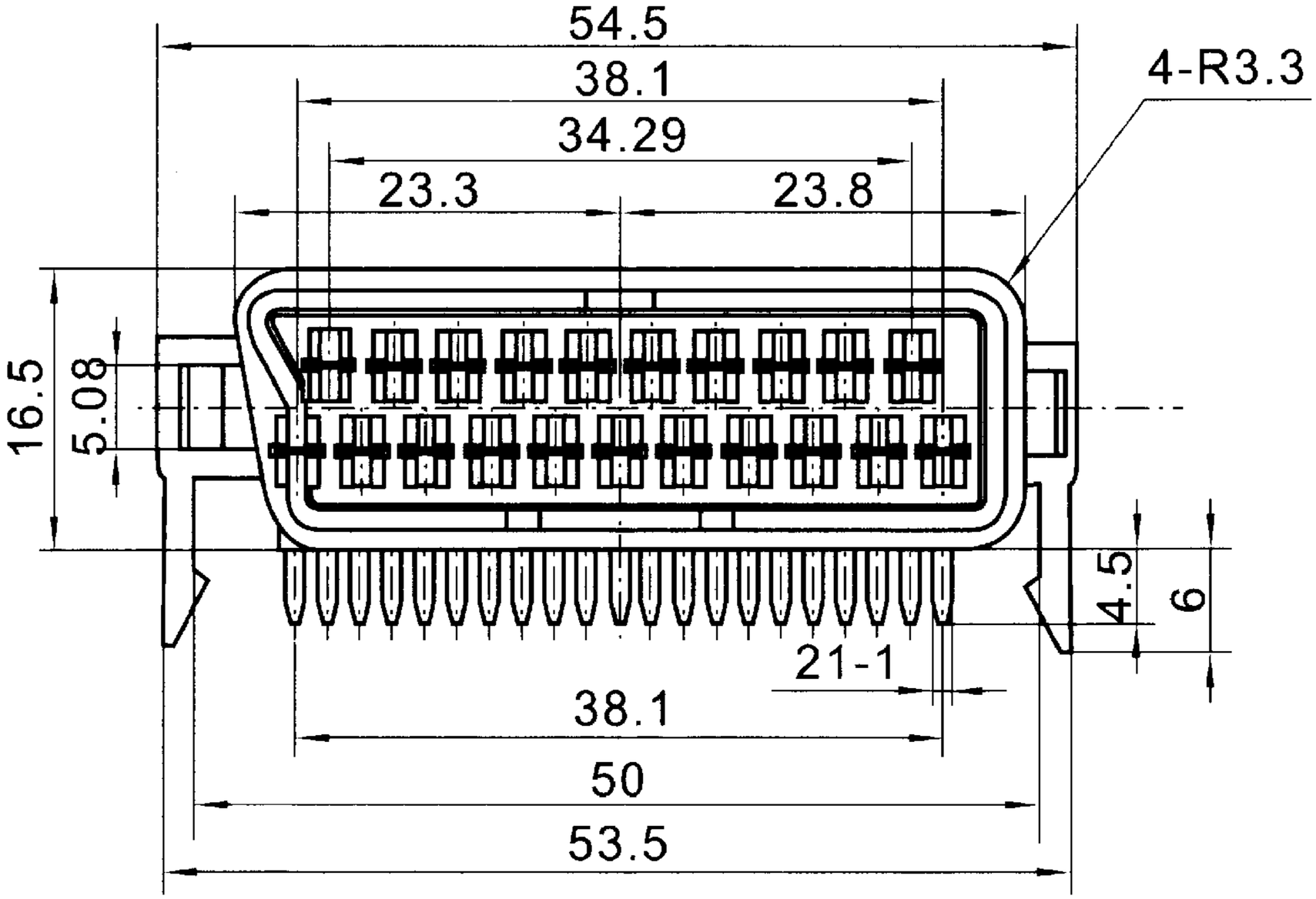
54.5
38.1
34.29
23.3
23.8
4-R3.3
16.5
5.08
4.5
6
21-1
38.1
50
53.5

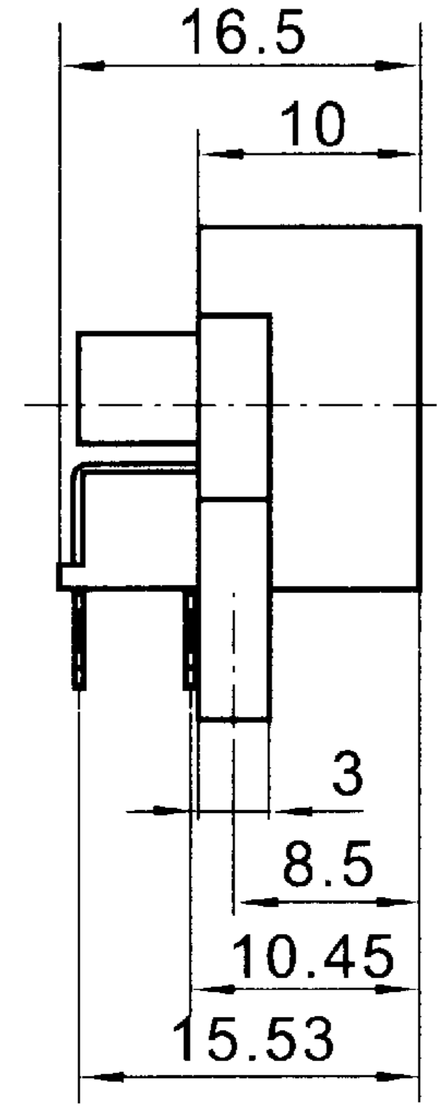
16.5
10
3
8.5
10.45
15.53

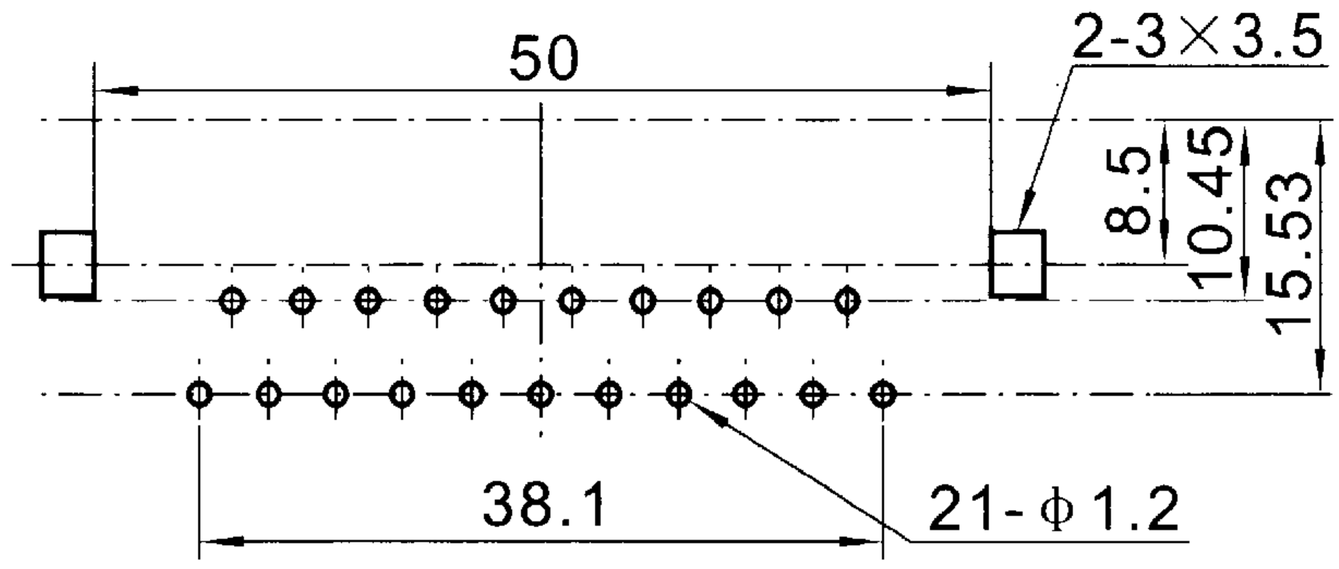
50
2-3×3.5
8.5
10.45
15.53
38.1
21-Φ1.2