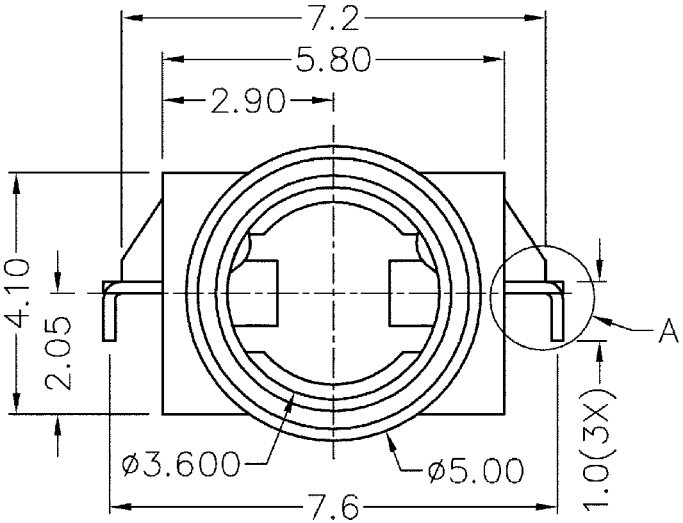

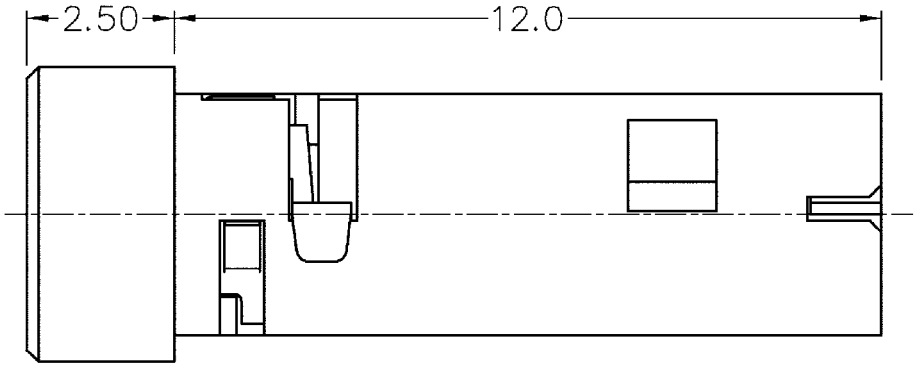

A DETAIL
SCALE 10:1

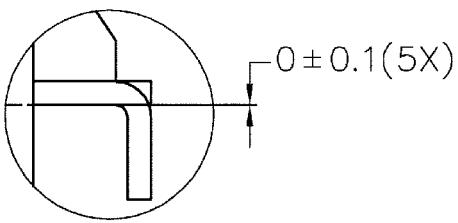

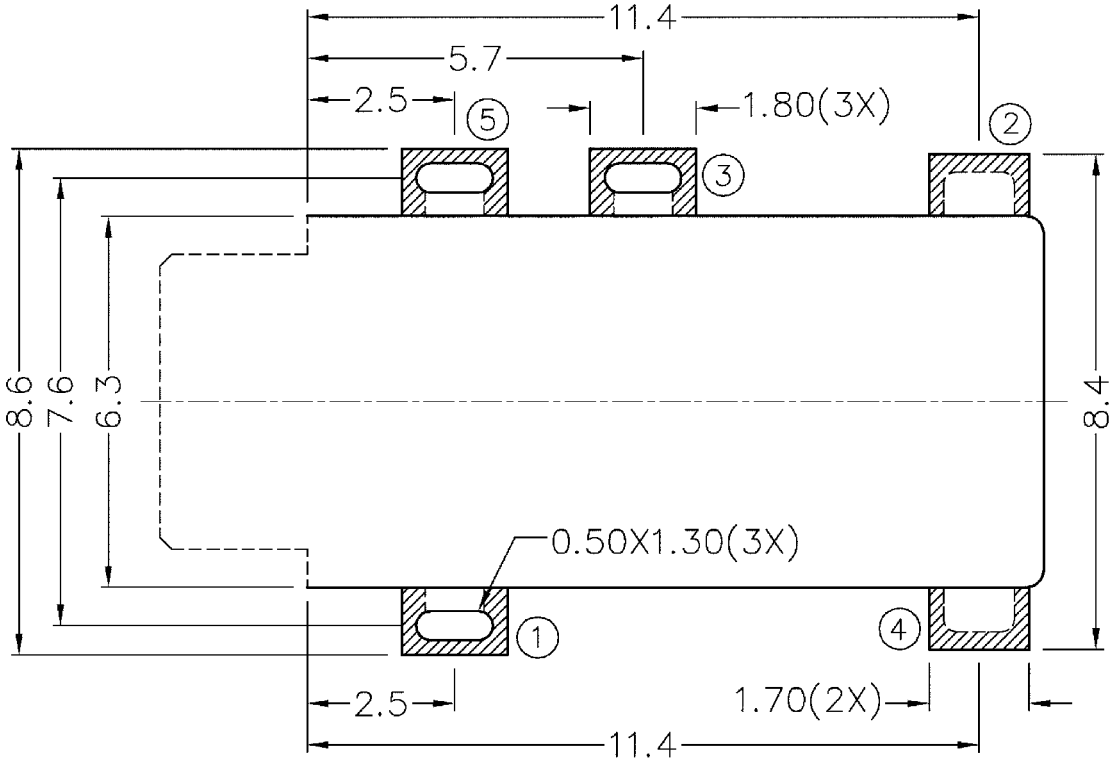
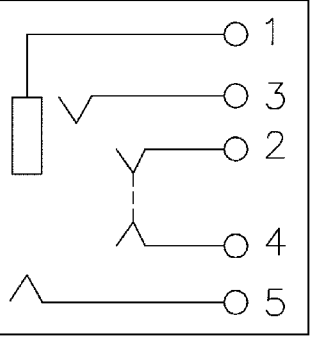
MODEL NO.	ST-505-01
SCHEMATIC