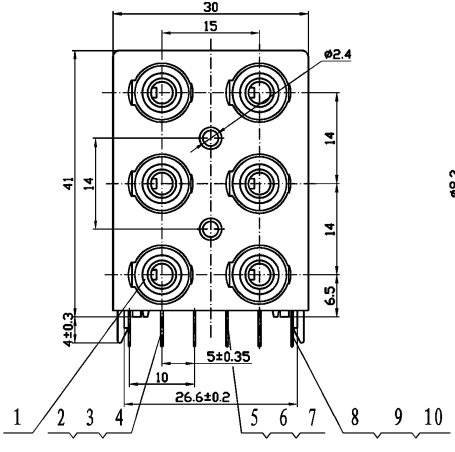


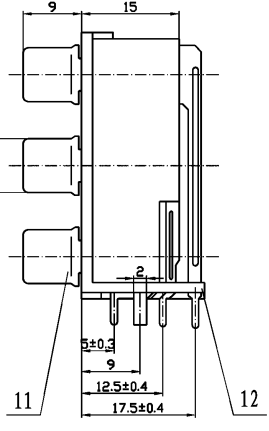


Dimensions of PC board holes (Commend)

Bottom View (t=1.6mm)

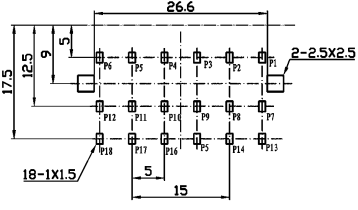


Circuit Diagram

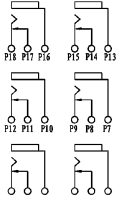


Gauge Plug

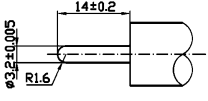


Model No. RS-619A2