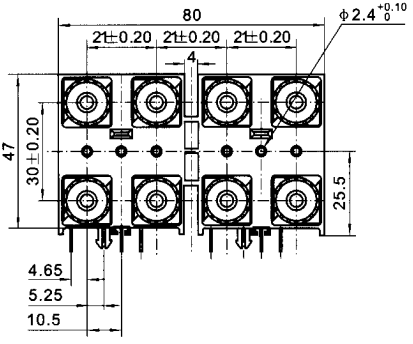
80
2±0.20
2±0.20
2±0.20
4
φ2.4 +0.10 0
47
30±0.20
25.5
4.65
5.25
10.5

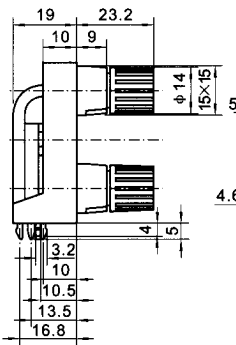
19
23.2
10
9
φ14
15×15
4
5
3.2
10
10.5
13.5
16.8

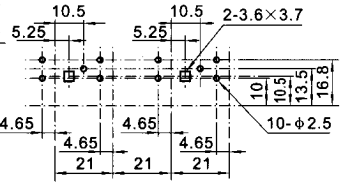
10.5
10.5
2-3.6×3.7
5.25
5.25
10
10.5
13.5
16.8
10-φ2.5
4.65
4.65
4.65
4.65
21
21
21