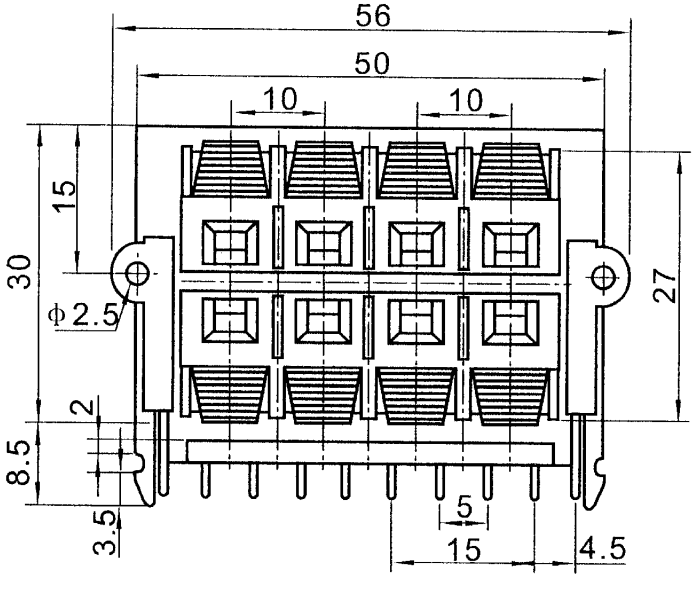
56
50
10
10
15
30
Φ2.5
27
2
8.5
3.5
5
15
4.5

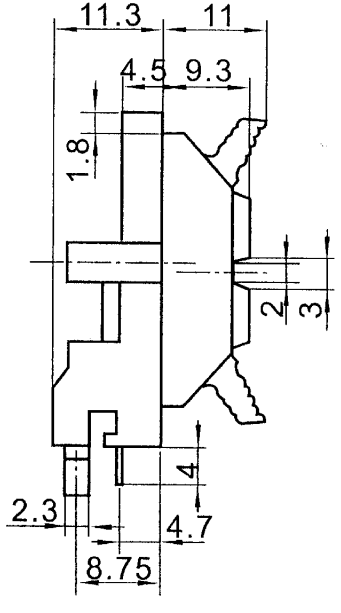
11.3
11
4.5
9.3
1.8
2
3
4
2.3
4.7
8.75

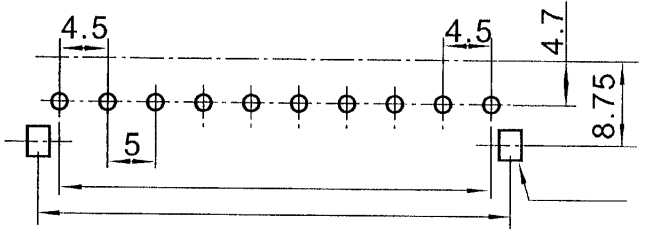
4.5
4.5
4.7
8.75
5