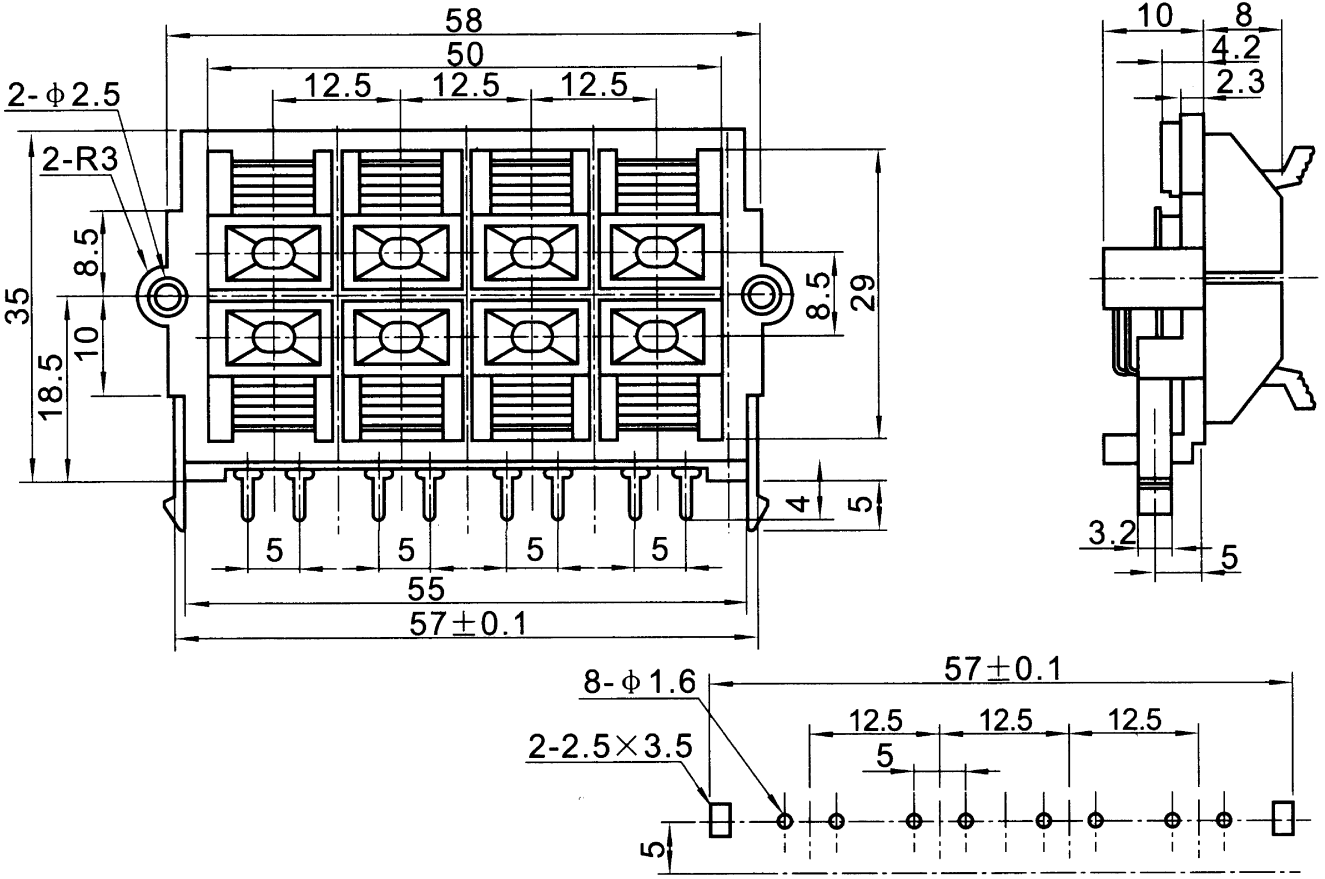
58
50
12.5
12.5
12.5
2-φ2.5
2-R3
8.5
35
10
18.5
8.5
29
4
5
5
5
5
5
55
57±0.1
10
8
4.2
2.3
3.2
5
8-φ1.6
57±0.1
12.5
12.5
12.5
2-2.5×3.5
5
5