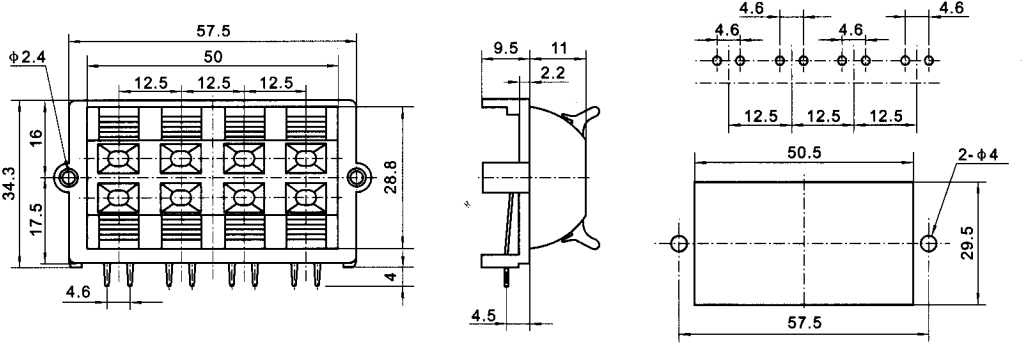
57.5
50
12.5
12.5
12.5
φ2.4
16
34.3
17.5
28.8
4
4.6
9.5
11
2.2
4.5
4.6
4.6
4.6
12.5
12.5
12.5
50.5
2-φ4
29.5
57.5