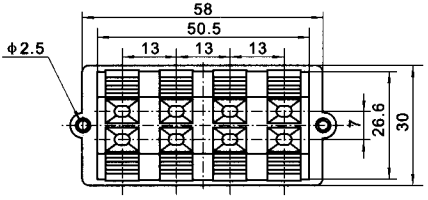
58
50.5
13
13
13
ϕ2.5
7
26.6
30

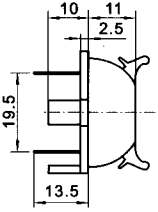
10
11
2.5
19.5
13.5

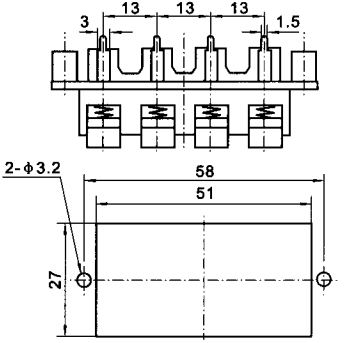
3
13
13
13
1.5
2-ϕ3.2
58
51
27