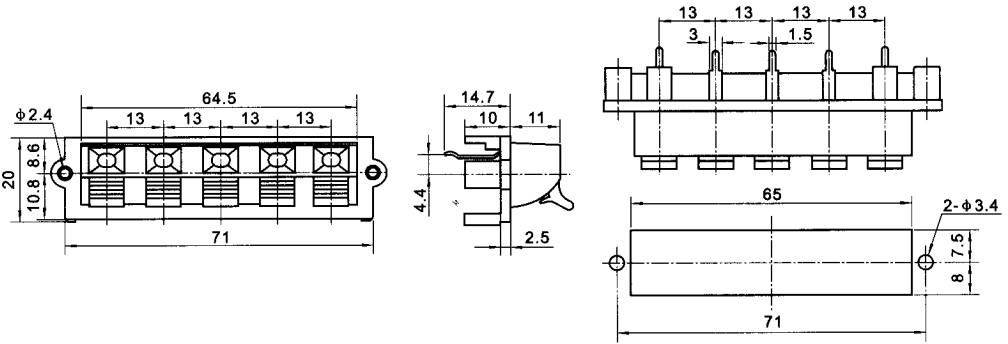
64.5
13
13
13
13
Φ2.4
20
8.6
10.8
71
14.7
10
11
4.4
2.5
13
13
13
13
3
1.5
65
2-Φ3.4
7.5
8
71