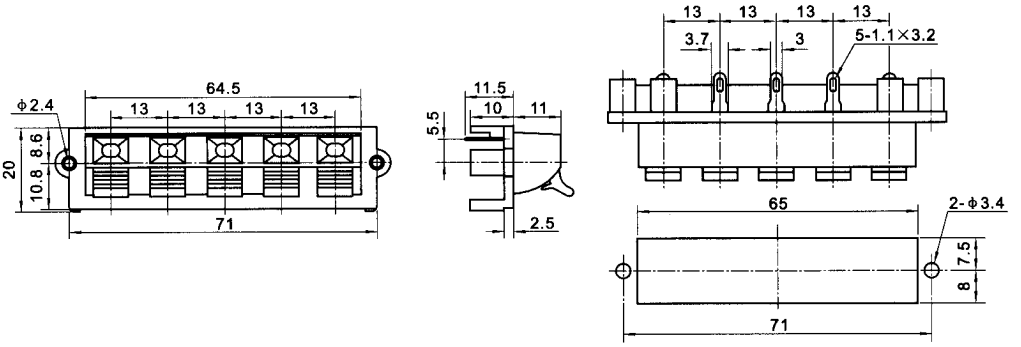
64.5
13
13
13
13
ϕ2.4
8.6
20
10.8
71
11.5
10
11
5.5
2.5
13
13
13
13
3.7
3
5-1.1×3.2
65
2-ϕ3.4
7.5
8
71