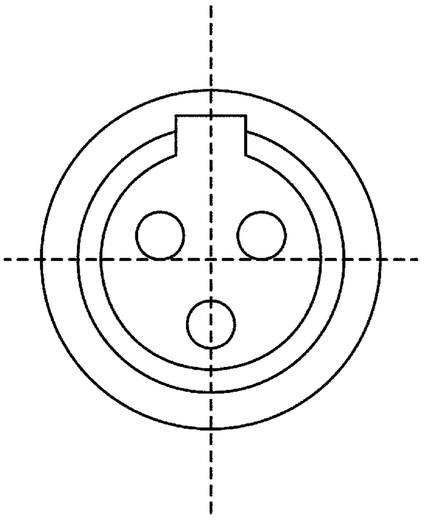

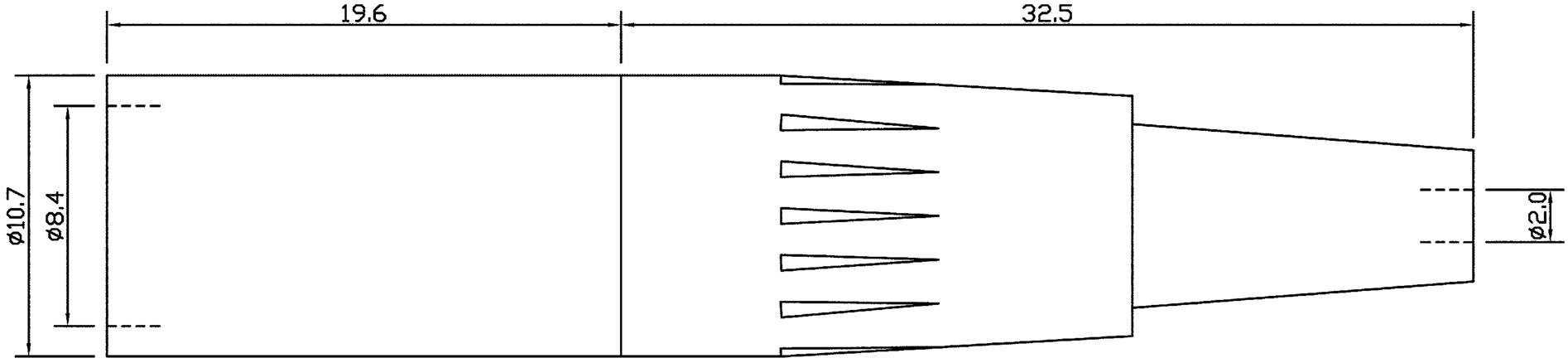
19.6
32.5
ø10.7
ø8.4
ø2.0

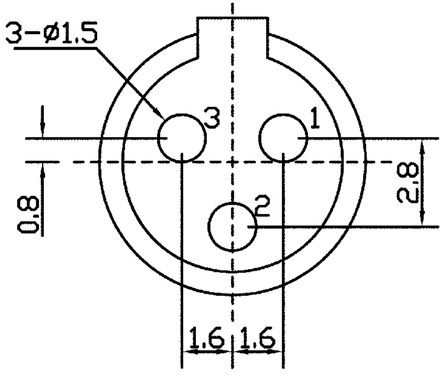
3-ø1.5
3
1
2
0.8
2.8
1.6
1.6

3P

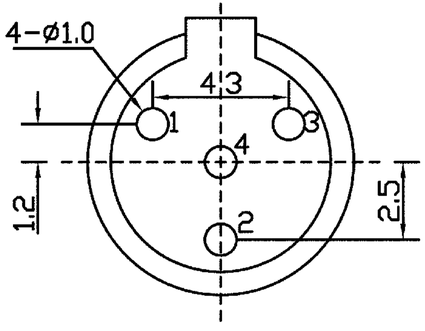
4-ø1.0
4.3
1
3
4
2
1.2
2.5

4P

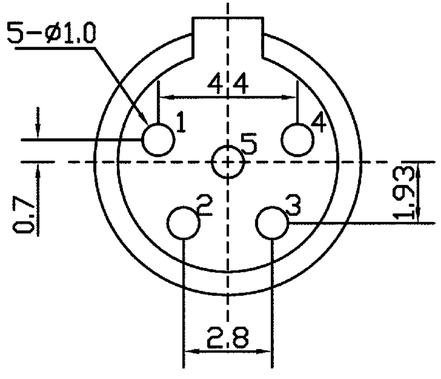
5-ø1.0
4.4
1
4
5
2
3
0.7
1.93
2.8

5P