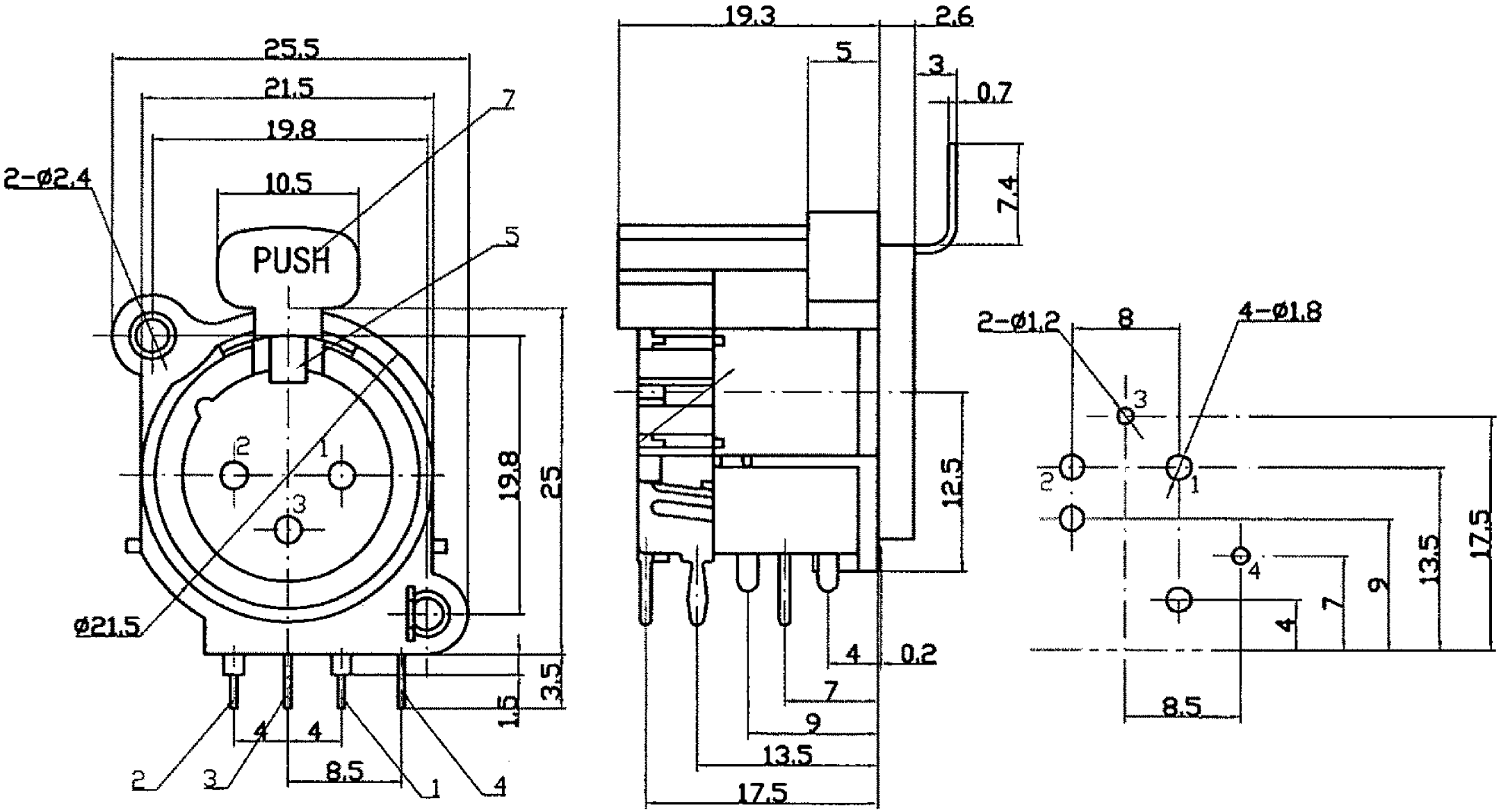
25.5
21.5
19.8
10.5
2-Ø2.4
7
5
PUSH
2
1
3
19.8
25
Ø21.5
3.5
1.5
4
4
8.5
2
3
1
4
19.3
2.6
5
3
0.7
7.4
12.5
4
0.2
7
9
13.5
17.5
2-Ø1.2
8
4-Ø1.8
3
2
1
4
4
7
9
13.5
17.5
8.5