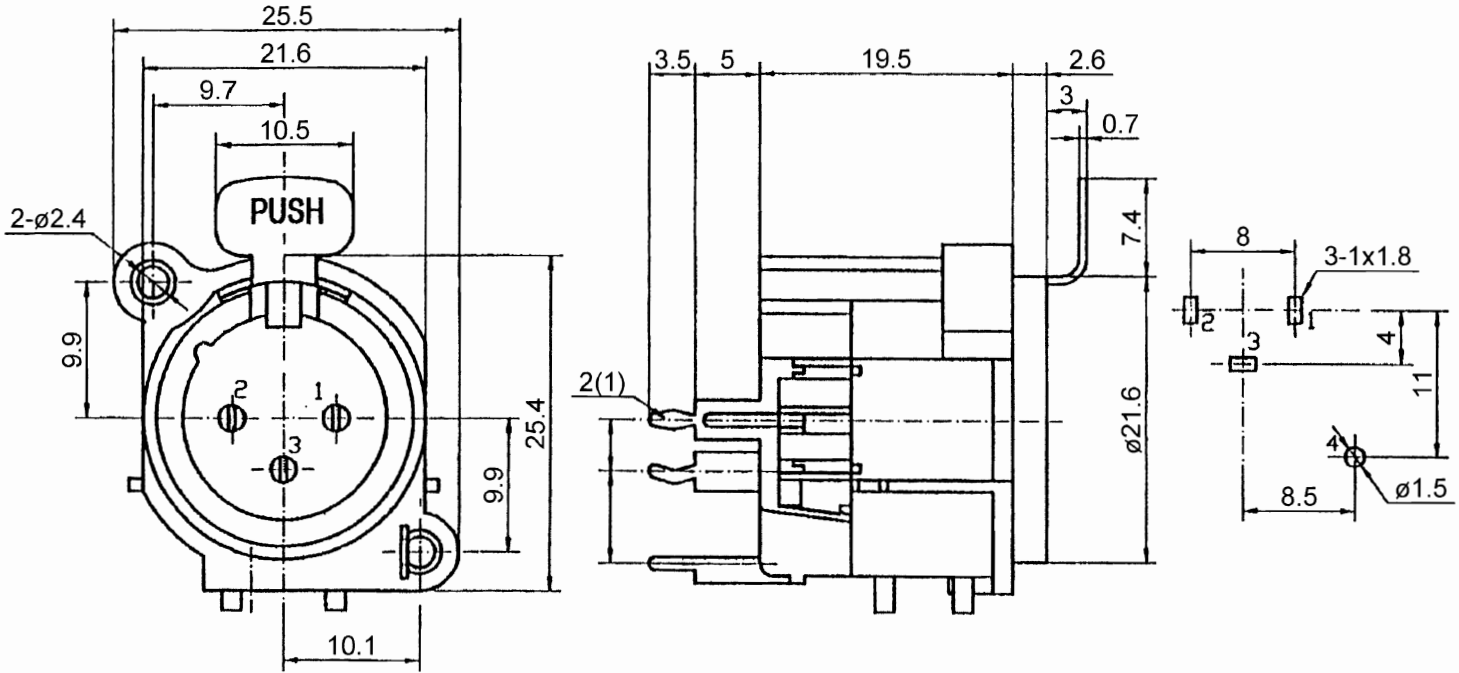
25.5
21.6
9.7
10.5
PUSH
2-ø2.4
9.9
2
1
3
25.4
9.9
10.1
3.5
5
19.5
2.6
3
0.7
7.4
2(1)
ø21.6
8
3-1x1.8
2
1
3
4
11
4
8.5
ø1.5