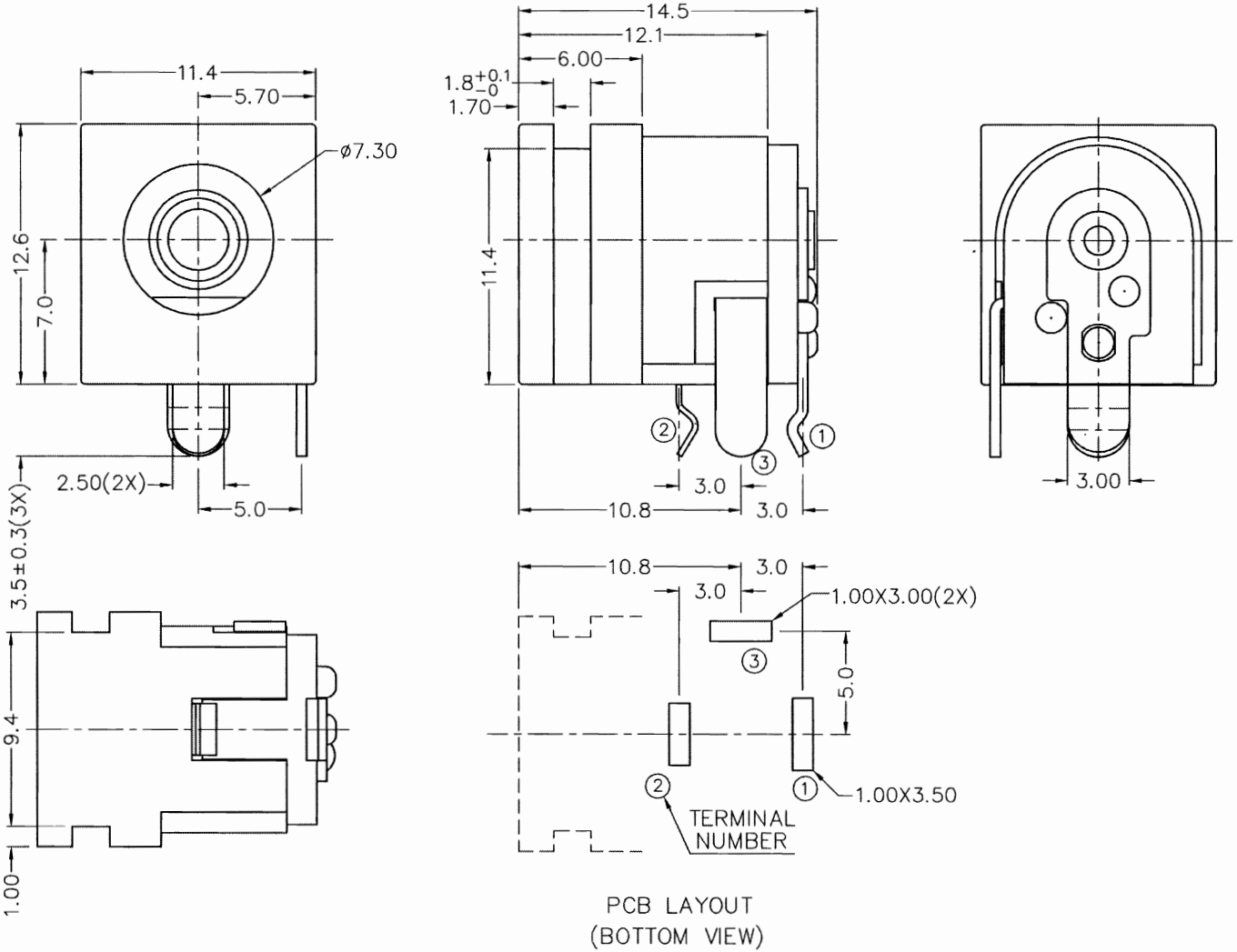
11.4
5.70
ø7.30
12.6
7.0
2.50(2X)
5.0
3.5±0.3(3X)
9.4
1.00
14.5
12.1
6.00
1.8 +0.1 −0
1.70
11.4
3.0
10.8
3.0
3.00
10.8
3.0
3.0
1.00X3.00(2X)
5.0
1.00X3.50
TERMINAL NUMBER
PCB LAYOUT
(BOTTOM VIEW)