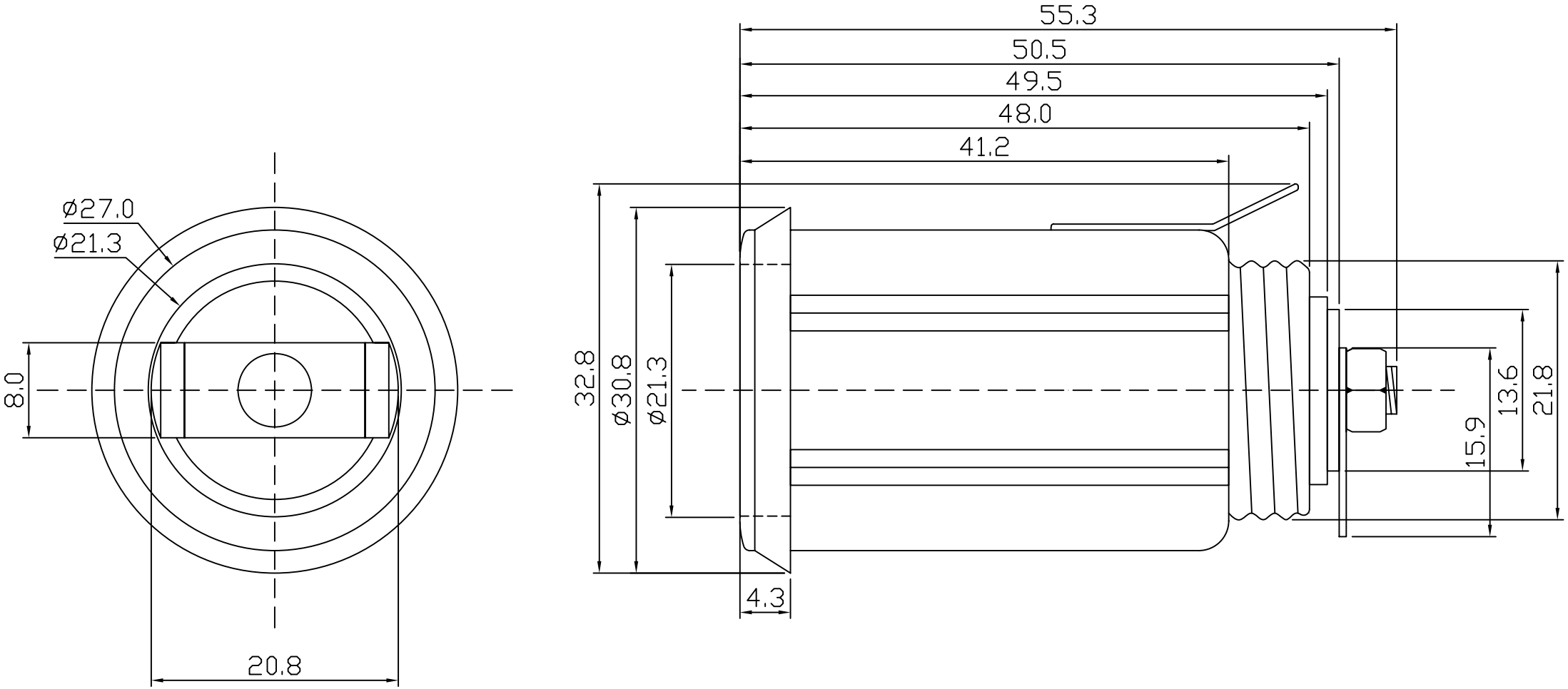
55.3
50.5
49.5
48.0
41.2
ø27.0
ø21.3
8.0
20.8
32.8
ø30.8
ø21.3
4.3
15.9
13.6
21.8